British Gas 430/i

WALL HUNG RSF GAS-FIRED CONDENSING SYSTEM BOILER

FOR SEALED CENTRAL HEATING SYSTEMS
AND INDIRECT FED DOMESTIC HOT WATER

THE APPLIANCE IS FOR USE WITH
NATURAL GAS OR L.P.G. (Cat II 2H3P TYPE C13 & C33)

NATURAL GAS:	430/i GC-Number 41-311-80
LIQUID PETROLEUM GAS:	430/i GC-Number 41-311-81

GB/IE

British Gas

Scottish Gas

INSTRUCTION MANUAL

INSTALLATION, COMMISSIONING & SERVICING

CONTACT INFORMATION

Home Heating: 0845 600 9400
SERVICE : 0845 9500 400
WEBSITE: www.house.co.uk

WATER TREATMENT:

FERNOX 01799 550811
www.fernox.com

SENTINEL 0151 420 9595
www.betzdearborn.com/sentinel

Salamander 0121 378 0952
www.salamander-engineering.co.uk

FLUE TERMINAL GUARD:

TOWER FLUE COMPONENTS
VALE RISE
TONBRIDGE
TN9 1TB

STORE THE APPLIANCE IN A DRY AREA PRIOR TO INSTALLATION.

INSTALLATION & SERVICING INSTRUCTIONS

PLEASE READ THESE INSTRUCTIONS CAREFULLY BEFORE STARTING INSTALLATION.

THESE INSTRUCTIONS ARE APPLICABLE TO THE BRITISH GAS APPLIANCE MODEL(S) STATED ON THE FRONT COVER OF THIS MANUAL ONLY AND MUST NOT BE USED WITH ANY OTHER MAKE OR MODEL OF APPLIANCE.

THE INSTRUCTIONS APPLY IN THE UK ONLY AND MUST BE FOLLOWED EXCEPT FOR ANY STATUTORY OBLIGATION.

THIS APPLIANCE MUST BE INSTALLED BY A COMPETENT PERSON. FAILURE TO INSTALL CORRECTLY COULD LEAD TO PROSECUTION.

IF YOU ARE IN **ANY DOUBT** CONTACT BRITISH GAS HELPLINE.

PLEASE LEAVE THESE INSTRUCTIONS, THE USER GUIDE AND THE COMPLETED BENCHMARK LOG BOOK OR A CERTIFICATE CONFIRMING COMPLIANCE WITH IS 813 (EIRE ONLY) WITH THE USER OR AT THE GAS METER AFTER INSTALLATION OR SERVICING.

ABBREVIATIONS USED IN THIS MANUAL:

Ø	Diameter
NG	Natural Gas
LPG	Liquid Petroleum Gas
CH	Central Heating
DHW	Domestic Hot Water
IP	Ingress Protection
SEDBUK	Seasonal Efficiency of Domestic Boilers in the United Kingdom

SYMBOLS USED IN THIS MANUAL:

Domestic hot water

Central heating

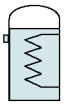
Hot water storage cylinder

Cold water main supply

Electricity supply

Gas supply

Time clock C H only

Programmer/timer

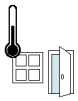
Room thermostat

Wait time period

LIFTING AND CARRYING PRECAUTIONS:
- Lift only a manageable weight, or ask for help.
- When lifting the boiler, bend the knees, and keep the back straight and feet apart.
- Do not lift and twist at the same time.
- Lift and carry the boiler close to the body
- Wear protective clothing and gloves to protect from any sharp edges

SAFETY & REGULATIONS

SAFETY PRECAUTIONS	4
INSTALLATION REGULATIONS	4

APPLIANCE INFORMATION

GENERAL INFORMATION	5
TECHNICAL DATA	6
LAYOUT & COMPONENTS	7-8

PRE-INSTALLATION

CLEANING PRIMARY SYSTEMS	9
MAINS SUPPLIES	10
WATER SYSTEMS & PIPEWORK	11
CONDENSATE PIPEWORK	12
BOILER LOCATION & CLEARANCES	13-14
PLUMBING MANIFOLD	15
FLUE TERMINAL POSITIONS	16
FLUE OPTIONS	17

INSTALLATION

UNPACKING WALL FRAME AND ANCILLARY ITEMS	18
WALL MOUNTING PLATE / FLUE OPENING	19
UNPACKING THE APPLIANCE	20
FITTING THE APPLIANCE / BOILER CONNECTIONS	21
FLUE INSTALLATION	22-24
CONDENSATE CONNECTION	25
ELECTRICAL	26-27
POSITION OF WIRED COMPONENTS	28

COMMISSIONING

PRE-COMMISSIONING CHECKS	29
FILLING THE SYSTEM	30
STARTING THE APPLIANCE	31
WATER TREATMENT	32
COMMISSIONING	33
FINISHING COMMISSIONING	34

SERVICING & SPARES

INSPECTION AND SERVICE	35-39
REPLACEMENT OF PARTS	40-48
SETTING THE GAS/AIR RATIO	49
SHORT PARTS LIST	50

CONVERSION KITS

L.P.G. CONVERSION	51

FAULT FINDING & DIAGNOSIS

FAULT FINDING	52
CENTRAL HEATING FUNCTION	53
CYLINDER HEAT FUNCTION	54
PROTECTION FUNCTION	55
GAS BOILER COMMISSIONING CHECKLIST	56
SERVICE RECORD	57

SAFETY PRECAUTIONS

IF YOU SMELL GAS:

✖ **DON'T** SMOKE OR STRIKE MATCHES
✖ **DON'T** TURN ELECTRICAL SWITCHES ON OR OFF

✔ **DO** PUT OUT NAKED FLAMES
✔ **DO** OPEN DOORS AND WINDOWS
✔ **DO** KEEP PEOPLE AWAY FROM THE AREA AFFECTED
✔ **DO** TURN OFF THE CONTROL VALVE AT THE METER

✔ TELEPHONE THE NATIONAL GAS EMERGENCY SERVICE ON 0800 111999

A British Gas Checklist is provided by the manufacturer for the installer to complete including their **CORGI** registration number to confirm that the boiler has been installed, commissioned and serviced according to the manufacturer's instructions.

IMPORTANT: The completed checklist will be required in the event of any warranty work and may be required by the local Building Control Inspector.

HEALTH & SAFETY

The appliance contains no asbestos and no substances have been used in the construction process that contravene the COSHH Regulations (Control of Substances Hazardous to Health Regulations 1988).

COMBUSTIBLE AND CORROSIVE MATERIALS

Do not store or use any combustible materials (paper, thinners, paints etc.) inside or within the vicinity of the appliance.

Chemically aggressive substances, such as halogenated hydrocarbons containing chlorine or fluorine compounds can corrode the appliance and invalidate any warranty.

FITTING & MODIFICATIONS

Fitting the appliance and any controls to the appliance may only be carried out by a competent engineer in accordance with the Gas Safety (Installation and Use) Regulations 1998.

Flue systems must not be modified in any way other than as described in the fitting instructions. Any misuse or unauthorised modifications to the appliance, flue or associated components and systems could invalidate the warranty. The manufacturer accepts no liability arising from any such actions, excluding statutory rights.

SERVICING

Advise the user to have the system serviced annually by a competent, qualified engineer (such as British Gas or CORGI registered personnel) using approved spares, to help maintain the economy, safety and reliability of the appliance.

INSTALLATION REGULATIONS

Gas Safety (Installation & Use) Regulations: All gas appliances must be installed by a competent person in accordance with the above regulations. Failure to install appliances correctly could lead to prosecution.

The appliance must be installed in accordance with, and comply to, the current: Gas Safety Regulations, IEE Regulations, Building Regulations, Building Standards (Scotland) (Consolidation), Building Regulations (Northern Ireland), local water by-laws, Health & Safety Document 635 (The Electricity at Work Regulations 1989) and any other local requirements.

British Standards:
The relevant British Standards should be followed, including:
BS7074:1 : Code of practice for domestic and hot water supply
BS6891 : Installation of low pressure gas pipework up to 28mm (R1)
BS5546 : Installation of gas hot water supplies for domestic purposes
EN:12828 : Central heating for domestic premises
BS5440:1 : Flues and ventilation for gas appliances of rated heating not exceeding 70kW (net) : Flues
BS5440:2 : Flues and ventilation for gas appliances of rated heating not exceeding 70kW (net) : Air Supply
BS7593 : Treatment of water in domestic hot water central heating systems
BS 6798 : Installation of gas fired boilers of rated input up to 70kW (net)
Where no specific instruction is given, reference should be made to the relevant British Standard codes of Practice.

L.P.G. Installation:
An appliance using L.P.G. must not be installed in a room or internal space below ground level unless one side of the building is open to the ground.

Timber framed buildings:
Where the boiler is to be fitted to a timber framed building the guidelines laid down in BS5440: Part 1 and IGE "Gas Installations in Timber Frame Buildings" should be adhered to.

Potable water:
All seals, joints and compounds (including flux and solder) and components used as part of the secondary domestic water system must be approved by WRAS.

CH water:
Artificially softened water must not be used to fill the central heating system.

STANDARD PACKAGE:

A - Wall hung gas fired condensing system boiler for central heating and domestic hot water
B - Wall mounting plate
C - Hanging bracket
D - Pre-plumbing manifold
E - Hardware pack
F - Literature pack
G - Bottom panel
H - Trap / Syphon Outlet Connection (22 mm Plastic Pipe)

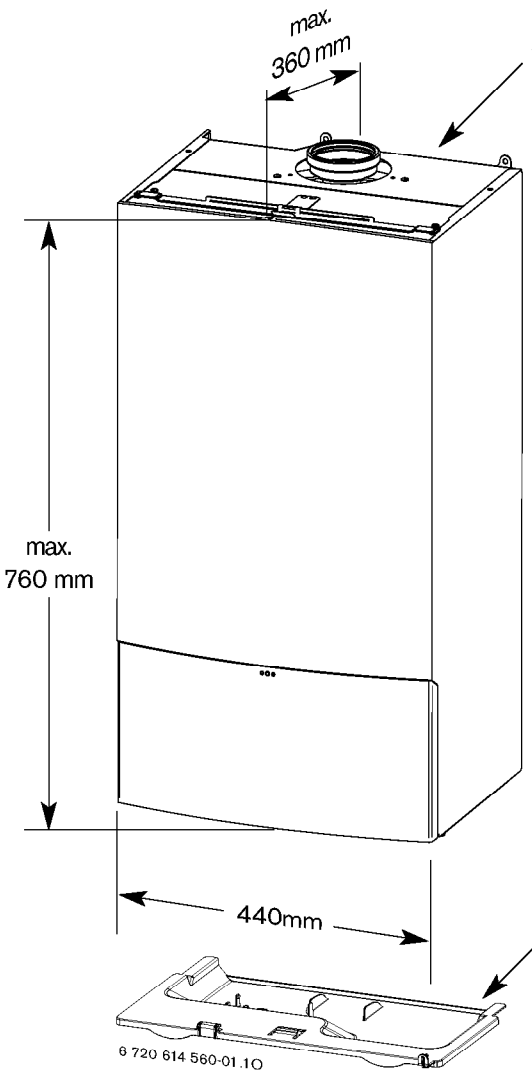

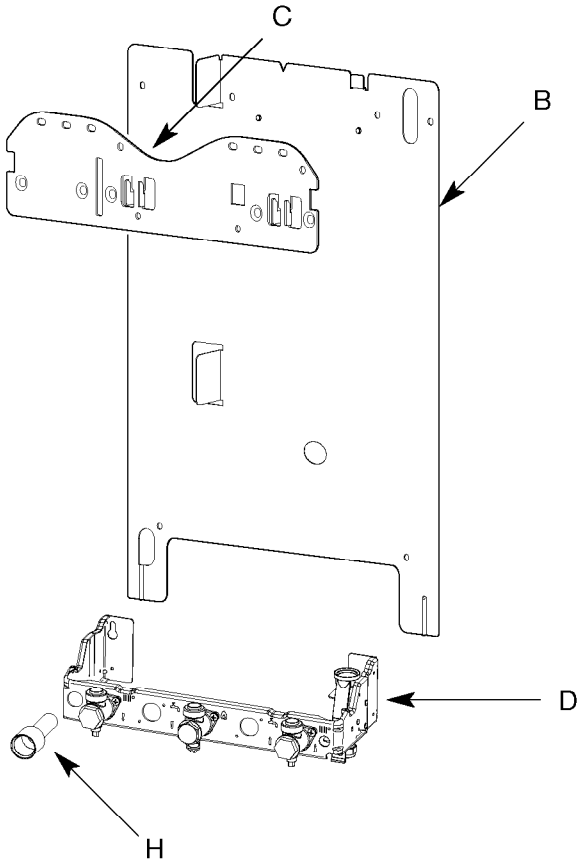

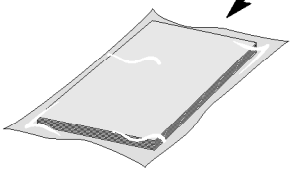

SPECIFICATIONS:

Pre-wired and pre-plumbed
Galvanised steel inner frame
Digital control system
Automatic ignition
Direct burner ignition
Built-in frost thermostat (boiler protection)
Built-in fault finding diagnostics
Modulating automatic gas valve
Combustion air fan with speed regulator
CH temperature sensor & control
Pump anti-seizure protection
Flue gas temperature limiter
Condensate trap & syphon
Modulating circulating pump

		NATURAL GAS	L.P.G.
DESCRIPTION	UNITS	430/i	430/i
Domestic hot water			
Min. heat input	kW	8.0	11.5
Max. rated heat output	kW	30.9	30.9
Max. rated heat input	kW	30.9	30.9
Domestic Hot Water temperature range	°C	40-70	40-70
Central Heating			
Max. rated heat input	kW	30.9	30.9
Max. rated heat output net 40/30°C	kW	32.1	32.1
Max. rated heat output net 50/30°C	kW	31.8	31.8
Max. rated heat output net 80/60°C	kW	30.0	30.0
Min. rated heat output net 40/30°C	kW	8.6	12.4
Min. rated heat output net 50/30°C	kW	8.6	12.3
Min. rated heat output net 80/60°C	kW	7.7	11.0
Min. rated heat input net	kW	8.0	11.5
Max. flow temperature	°C	nom. 90	nom. 90
Max. permissible operating pressure	bar	3.0	3.0
Available pump head at 21°C system temperature rise	m	2	2
Gas flow rate - Max. 10 minutes from lighting			
Natural Gas G20	m^3/h	3.2	-
Propane Gas (LPG)	kg/h	-	2.4
Flue			
Flue Gas Temp. 80/60°C, rated min. load	°C	76/58	76/58
Flue Gas Temp. 40/30°C, rated min. load	°C	55/33	55/33
CO_2 level at max. rated heat output	%	9.6	11.5
CO_2 level at min. rated heat output	%	9.0	10.5
NOx - class		5	5
Condensate			
Max. condensation rate	l/h	2.7	2.7
pH value, approx.		4.8	4.8
Electrical			
Electrical power supply voltage	AC...V	230	230
Frequency	Hz	50	50
Max. power consumption	W	150	150
General Data			
SEDBUK	band	A	A
Appliance protection rating	IP	X4D	X4D
Appliance protection rating with mechanical or RF mech. timer fitted	IP	20	20
Permissible ambient temperatures	°C	0-50	0-50
Nominal capacity of appliance	l	3.75	3.75
Noise output level	dB(A)	43	43
Total boiler weight (lift weight)	kg	46.5	46.5
Packaged boiler weight	kg	54	54
SEDBUK	%	90.1	90.1

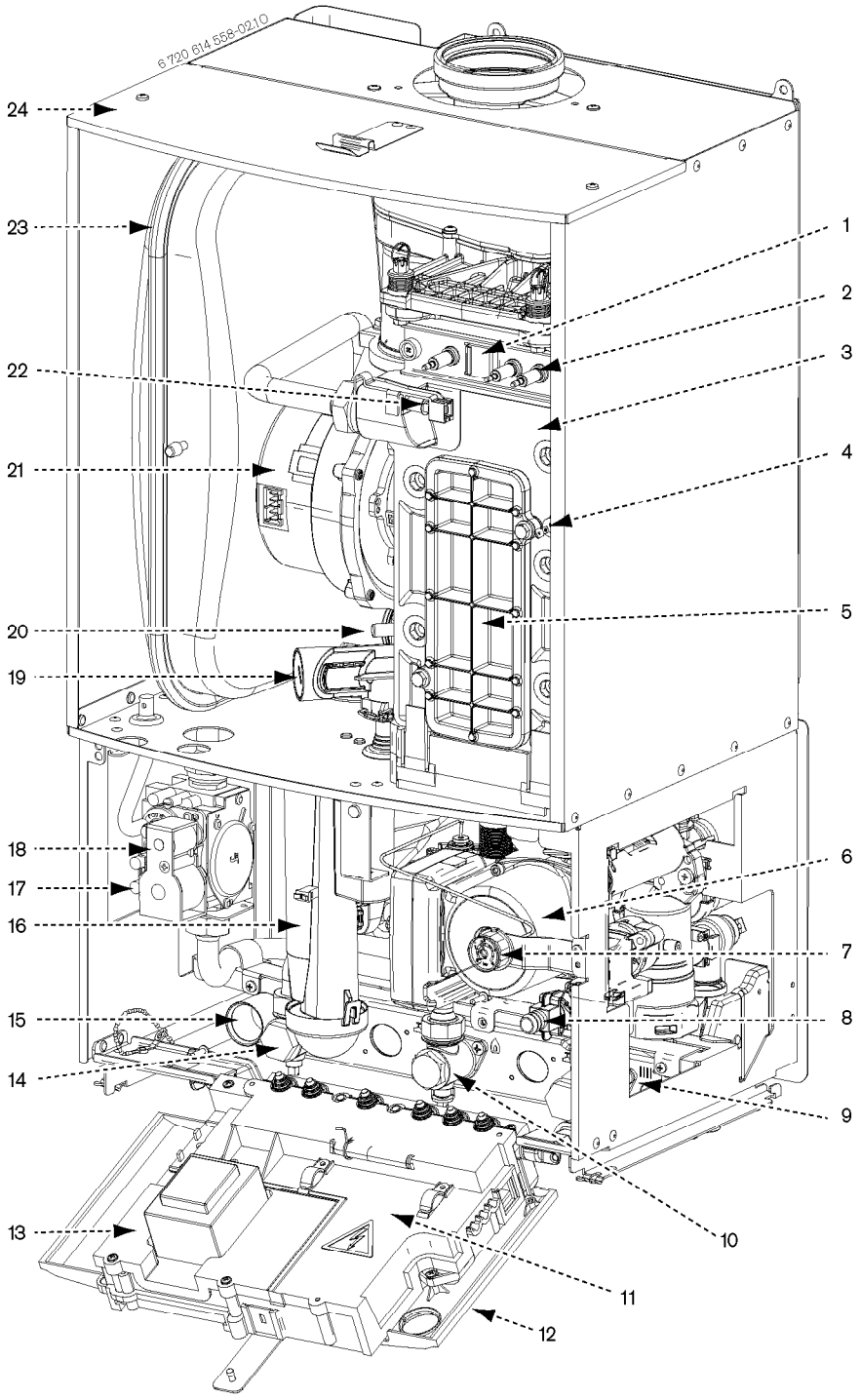

LAYOUT & COMPONENTS

The diagram opposite shows the controls in the servicing position and excludes the outer case.

1 FLAME VIEWING WINDOW
2 IGNITION ELECTRODE AND FLAME SENSE ELECTRODE
3 HEAT EXCHANGER
4 OVERHEAT THERMOSTAT
5 ACCESS POINT FOR CLEANING HEAT EXCHANGER
6 PUMP
7 SYSTEM PRESSURE GAUGE
8 DRAIN POINT
9 CH RETURN
10 GAS INLET CONNECTION 22 mm COMPRESSION
11 COVER FOR EXTERNAL WIRING CONNECTIONS
12 CONTROL PANEL IN SERVICE POSITION
13 ACCESS COVER FOR TRANSFORMER & PCB
14 CH FLOW
15 TRAP / SYPHON OUTLET CONNECTION (22 mm PLASTIC PIPE)
16 TRAP / SYPHON
17 INLET PRESSURE TEST POINT
18 GAS VALVE
19 AIR / GAS ADJUSTMENT SCREW
20 TESTING POINT FOR FAN PRESSURE
21 FAN
22 PRIMARY SENSOR
23 EXPANSION VESSEL
24 REMOVABLE TOP CASE PANEL FOR SERVICING

LAYOUT & COMPONENTS

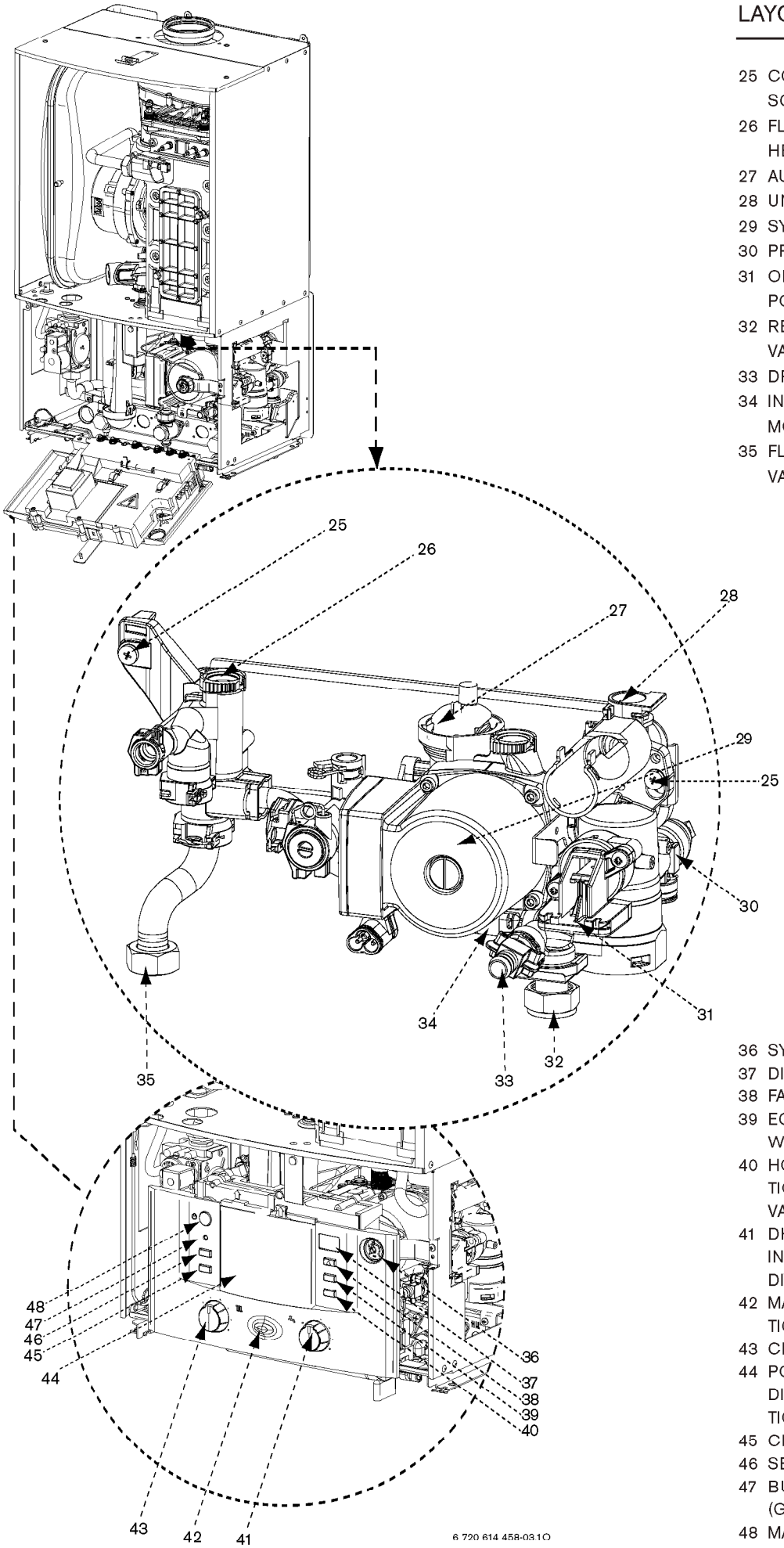

25 COMPACT HYDRAULIC MOUNTING SCREW (2) TO BOILER
26 FLOW CONNECTION FROM BOILER HEAT EXCHANGER
27 AUTO AIR VENT
28 UNUSED PORT
29 SYSTEM PUMP
30 PRESSURE RELIEF VALVE
31 OPTIONAL INTEGRAL DIVERTER VALVE POSITION
32 RETURN CONNECTION TO SERVICE VALVE
33 DRAIN POINT
34 INTERNAL BYPASS WITHIN PLASTIC MOULDING
35 FLOW CONNECTION TO SERVICE VALVE

36 SYSTEM PRESSURE GAUGE
37 DISPLAY
38 FAULT RESET BUTTON
39 ECO BUTTON (ONLY IN CONJUNCTION WITH OPTIONAL DIVERTER VALVE)
40 HOLIDAY BUTTON (ONLY IN CONJUNCTION WITH OPTIONAL DIVERTER VALVE)
41 DHW TEMPERATURE CONTROL (ONLY IN CONJUNCTION WITH OPTIONAL DIVERTER VALVE)
42 MAINS ON/OFF INDICATOR/DIAGNOSTIC LIGHT (BLUE)
43 CH TEMPERATURE CONTROL
44 POSITION FOR OPTIONAL TEXT DISPLAY WITH INTELLIGENT FUNCTIONALITY OR TIMER
45 CENTRAL HEATING BOOST BUTTON
46 SERVICE BUTTON
47 BURNER ON INDICATOR LIGHT (GREEN)
48 MASTER SWITCH ON/OFF

IMPORTANT: All the following Pre-Installation sections must be read and requirements met before starting boiler or flue installation.

CAUTION: ISOLATE THE MAINS SUPPLIES BEFORE STARTING ANY WORK AND OBSERVE ALL RELEVANT SAFETY PRECAUTIONS.

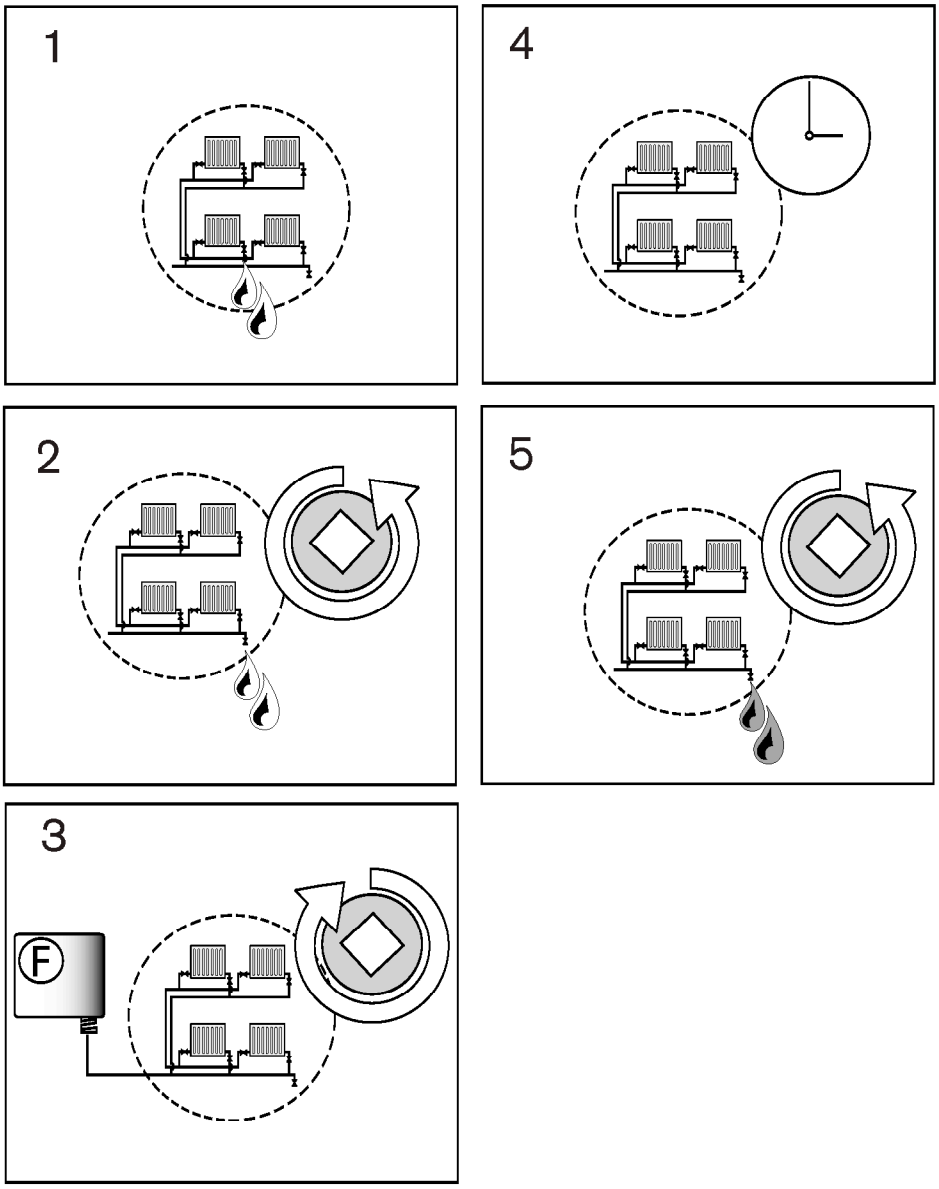

KEY

Valve

Flushing Agent

IMPORTANT: Debris from the system can damage the boiler and reduce efficiency. Failure to comply with the guidelines for the use of water treatment with the appliance will invalidate the appliance warranty.

BEFORE CLEANING THE SYSTEM:

ENSURE THE SYSTEM AND PIPEWORK IS IN GOOD WORKING ORDER

KEEP THE EXISTING BOILER/ CIRCULATING PUMP WHERE POSSIBLE OR USE A POWER FLUSHING MACHINE TO AID THE CLEANSING PROCEDURE BEFORE INSTALLING A NEW BOILER.

CLEANING THE PRIMARY SYSTEM:

1 Fill the system with cold water and check for leaks.
2 Open all drain cocks and drain the system.
3 Close drain cocks and add a suitable flushing agent at the correct strength for the system condition in accordance with the manufacturer's instructions.
- Circulate the flushing agent before the boiler is fired up.

4 Run the boiler/system at normal operating temperature as directed by the manufacturer of the flushing agent.
5 Drain and thoroughly flush the system to remove the flushing agent and debris.

MAINS SUPPLIES

ELECTRIC SUPPLY:

- Supply: 230V - 50Hz
  (See Technical Data for IP ratings.)
- Cable: PVC insulated 0.75mm^2
  (24 x 0.2mm) temperature rated to 90°C.
- External 3A fuse to BS1362.
- The appliance must be earthed.
- All pipes to the boiler must be cross-bonded.
- Wiring must comply with IEE wiring regulations and any local regulations which may apply to fixed wiring to a stationary appliance.

GAS SUPPLY:

- Boilers using NG must be connected to a governed meter.
- LPG boilers must be connected to a regulator.
- Installation and connection of the gas supply to the boiler must be in accordance with BS6891.
- Under no circumstances should the size of the gas supply pipe be less than that of the appliance inlet connection.
- The meter or regulator and pipework to the meter must be checked, preferably by the gas supplier, to ensure it is in good working order and can meet the gas flow and pressure requirements in addition to the demand from any other appliance being served. This does not include the pipework from the meter to the boiler.
- For olive connections we recommend using gas pipes with minimum 0.9 mm wall thickness.

S PLAN LAYOUT

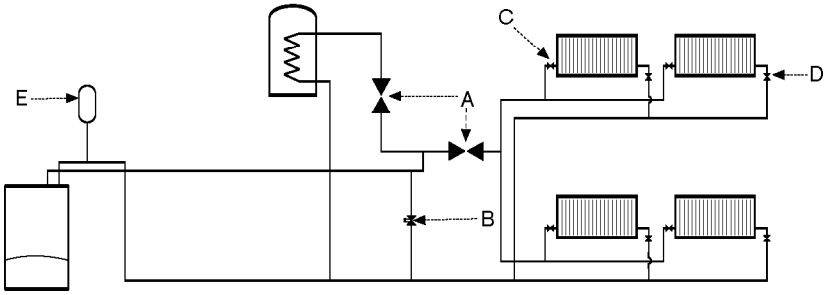

Y PLAN LAYOUT
WITH EXTERNAL DIVERTER VALVE

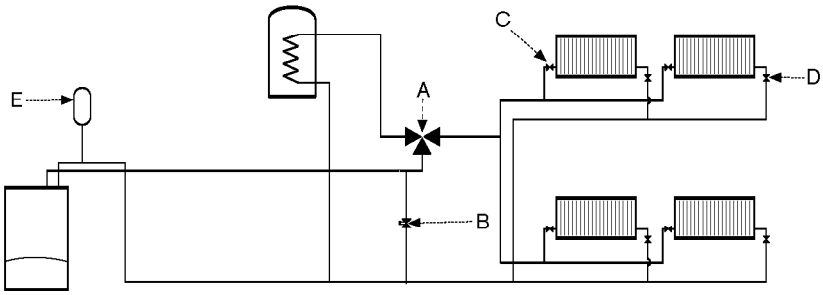

SYSTEM LAYOUT WITH OPTIONAL
INTERNAL DIVERTER VALVE FITTED
(NOT SUPPLIED WITH BOILER)

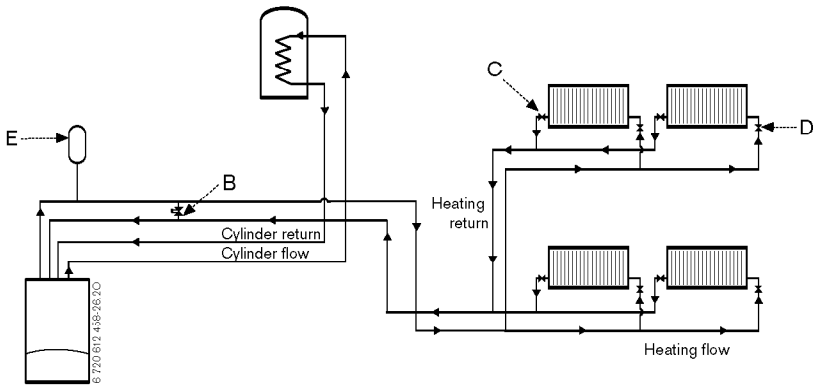

SYSTEM FILL

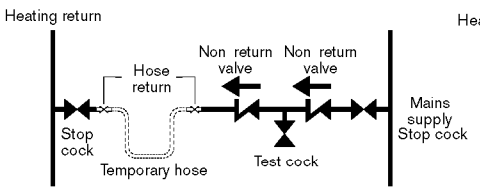

SYSTEM MAKE UP

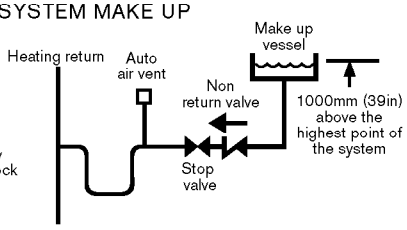

PLASTIC PIPEWORK:

- Any plastic pipework must have a polymeric barrier with 600 mm (minimum) length of copper or steel pipe connected to the boiler.
- Plastic pipework used for underfloor heating must be correctly controlled with a thermostatic blending valve limiting the temperature of the circuits to approx. 50°C.
  The pipework from the boiler to the blending valve must be in copper or steel (protected from corrosion).

CONNECTIONS/VALVES:

- All system connections, taps and mixing valves must be capable of sustaining a pressure up to 3 bar.
- Radiator valves should conform to BS2767:10.
- All other valves should conform to BS1010.
- On new installations, or extensions to existing systems where a radiator previously did not exist, each radiator should be fitted with a TRV, except the one fitted in the same room/area as the room thermostat.
- On boiler only replacement jobs, it is recommended, (but not mandatory,) to fit a TRV on each radiator. It is, however, a requirement, for energy conservation purposes, to recommend to the customer that a TRV is fitted to each radiator.
- An automatic bypass may be required, (downstream of the pump), in order to maintain the minimum flow-rate through the appliance.
- A drain cock is required at the lowest point on the system.
- An air vent is required at the highest point on the system.

A Diverter Valve
B Automatic Bypass
C Radiator Valve (Flow)
D Lockshield Valve (Return)
E Extra expansion Vessel

- **NB A drain cock should be fitted at the lowest point of the heating circuit and beneath the appliance.**

OPTIONAL INTERNAL DIVERTER VALVE:

- The sealed system must be filled using a WRAS approved filling loop or comply with the diagram opposite for System fill
- Where the system volume is more than 100 litres or exceeds 2.65 bar at maximum heating temperature an extra expansion vessel (E) must be fitted as close as possible to the appliance in the central heating return.
- Pressurize the extra expansion vessel (E) to the same figure as the expansion vessel built into the appliance.
- Do not use galvanised pipes or radiators.
- **NB A drain cock should be fitted at the lowest point of the heating circuit and beneath the appliance.**

1

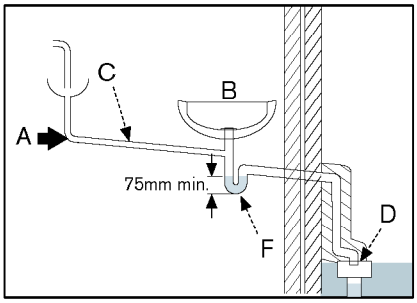

2

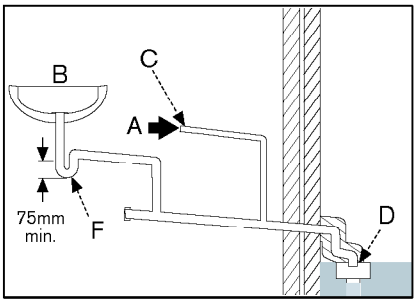

3

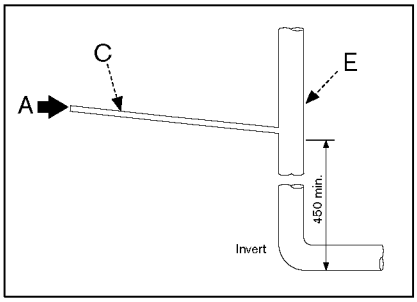

4

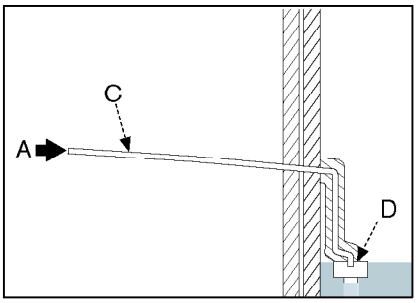

5

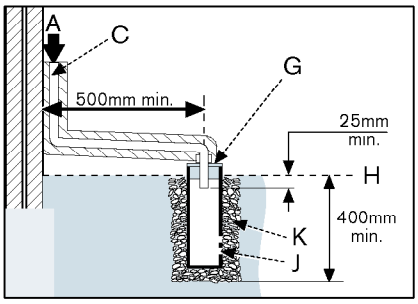

1 **Internal sink/washing machine drain**
2 **Internal waste drainage system**
3 **Soil/vent stack**
4 **External drainage system**
5 **External condensate absorption point**

A - Condensate from boiler
B - Sink
C - 22 mm Ø plastic condensate pipe
D - Gulley
E - Internal soil and vent stack
F - Serviceable waste trap (75 mm min)
G - 300 mm x 100 mm Ø sealed plastic tube
H - Ground level
J - Drainage holes 50 mm from base of tube (12 mm Ø at 25 mm centres) facing away from building
K - Limestone chippings

CONDENSATE PIPEWORK:

- The condensate pipe must be a minimum of 22 mm Ø plastic pipe.
- **The condensate pipework must fall at least 50 mm per metre towards the outlet and should take the shortest practicable route.**
- The pipework must follow one of the options shown opposite into an internal serviceable trap (min. 75 mm) such as a sink/washing machine) and discharge direct into a vent stack (E) min. 450 mm above pipe invert or into a gulley (D) below ground but above the water level.
- Wherever possible the condensate discharge pipe work should be routed and terminated internally. Should this not be possible, and the only available route is external, the following conditions should be observed:
  - Pipe work length should be kept to a minimum and the route as vertical as possible.
  - Where pipe work could be subjected to extreme cold or wind chill, a weather proof insulation should be used. Alternatively the condensate pipework could be increased to a minimum 32 mm without the requirement to insulate.

IMPORTANT: Ensure there are no blockages in the pipe run.

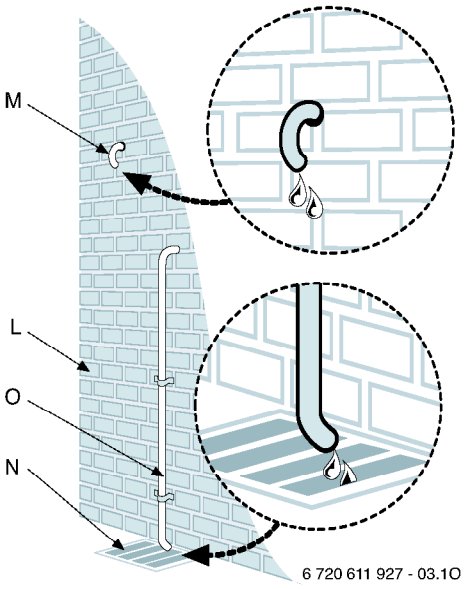

L - Outside wall
M, O - Drain pipe
N - External drain

PRESSURE RELIEF PIPEWORK

IMPORTANT: The pressure relief valve is a safety device for the boiler and if activated may discharge boiling water or steam through the relief valve drain pipe.
Care should be taken when siting the outlet pipe so that it does not cause an obstruction or discharge above a window, entrance or other public access where it could cause a hazard.

- The pressure relief drain pipe (M,O) from the boiler should be at least 15 mm diameter copper pipe and run downwards away from any electrics or other hazard, preferably to an external drain or soakaway.
- Pipe (M) should be finished with a partial bend, near the outlet to face the external wall (as shown) to help prevent freezing.
- Use waterproof pipe insulation in exposed positions and for external pipework.

SERVICING CLEARANCES

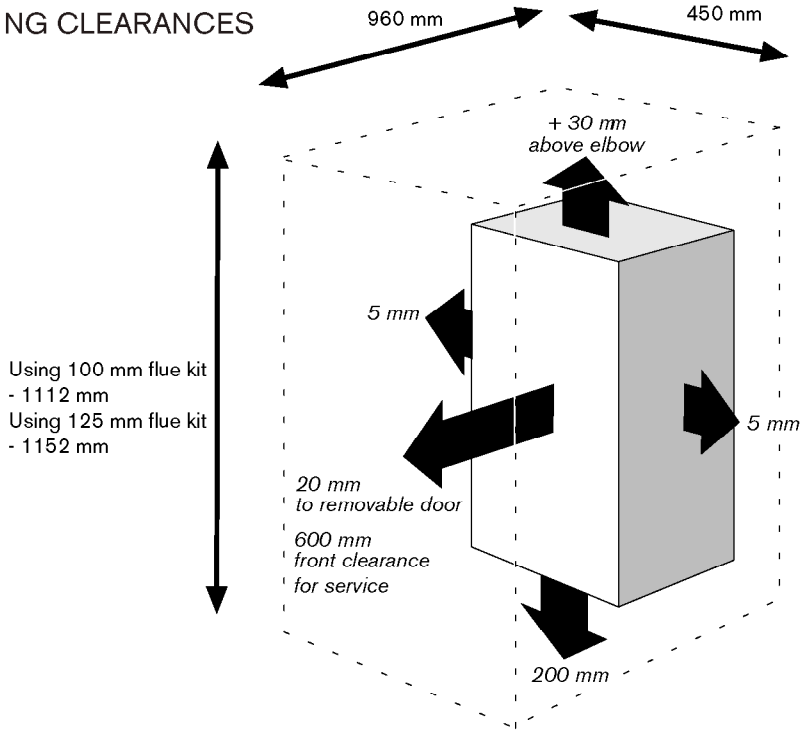

BOILER LOCATION & CLEARANCES

This boiler is only suitable for installing internally within a property at a suitable location onto a fixed, rigid non-combustible surface at least the same size as the boiler and capable of supporting the boiler weight.

COMPARTMENTS:

Follow the requirements of BS6798 and BS5440 Part 2 and note:

- Minimum clearances must be maintained
- An access door is required to install, service and maintain the boiler and any ancillary equipment.
- If fitting the boiler into an airing cupboard use a non-combustible perforated material (maximum hole sizes of 13mm) to separate the boiler from the airing space.

BOILER CLEARANCES:

The diagram opposite shows the minimum space required to install and service the boiler.

VENTILATION

This is a room sealed appliance and does not require any air for combustion from inside the property. If the appliance is fitted into a cupboard or a compartment is built around the appliance after installation, then the compartment must be separated from the boiler space by a perforated non-combustible partition as described in BS 6798.

Notwithstanding the requirements of BS 6798 and BS 5440 there is no need for ventilation openings to be provided in the compartment because of the low heat loss from the appliance casing, if the clearances shown are maintained.

Do not operate the appliance if the flue terminal fitted on the outside wall or roof is obstructed or damaged.

BOILER LOCATION & CLEARANCES

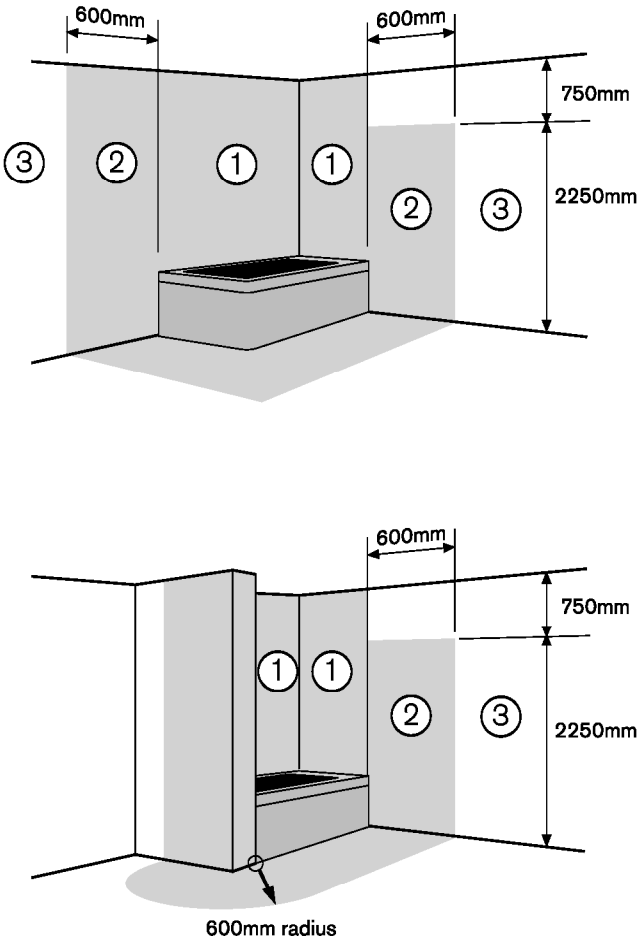

BATHROOMS:
The boiler can be installed in zones 2 or 3. If a mechanical or RF mechanical timer or text display with room thermostat (IP 20 only) is fitted the boiler can only be installed in zone 3.
A Non mechanical timer can be installed in zone 2.
See IEE wiring regulations.
(See Technical Data for IP ratings.)

IMPORTANT: any switch or appliance control using 230 V mains electricity must not be able to be touched by a person using the bath or shower.

Electrical switches, fused spur and socket outlets must not be situated in the bathroom.

For further information about bathroom installations please consult Operational Procedures Part 20, Electricity.

IMPORTANT: IF FITTING OPTIONAL INTEGRAL DIVERTER VALVE install the pipework as shown in the diagramm on the left side (see also additional informations in the document coming with the diverter valve kit).
If no diverter valve is fitted install the pipework as shown in the diagramm on the right side.

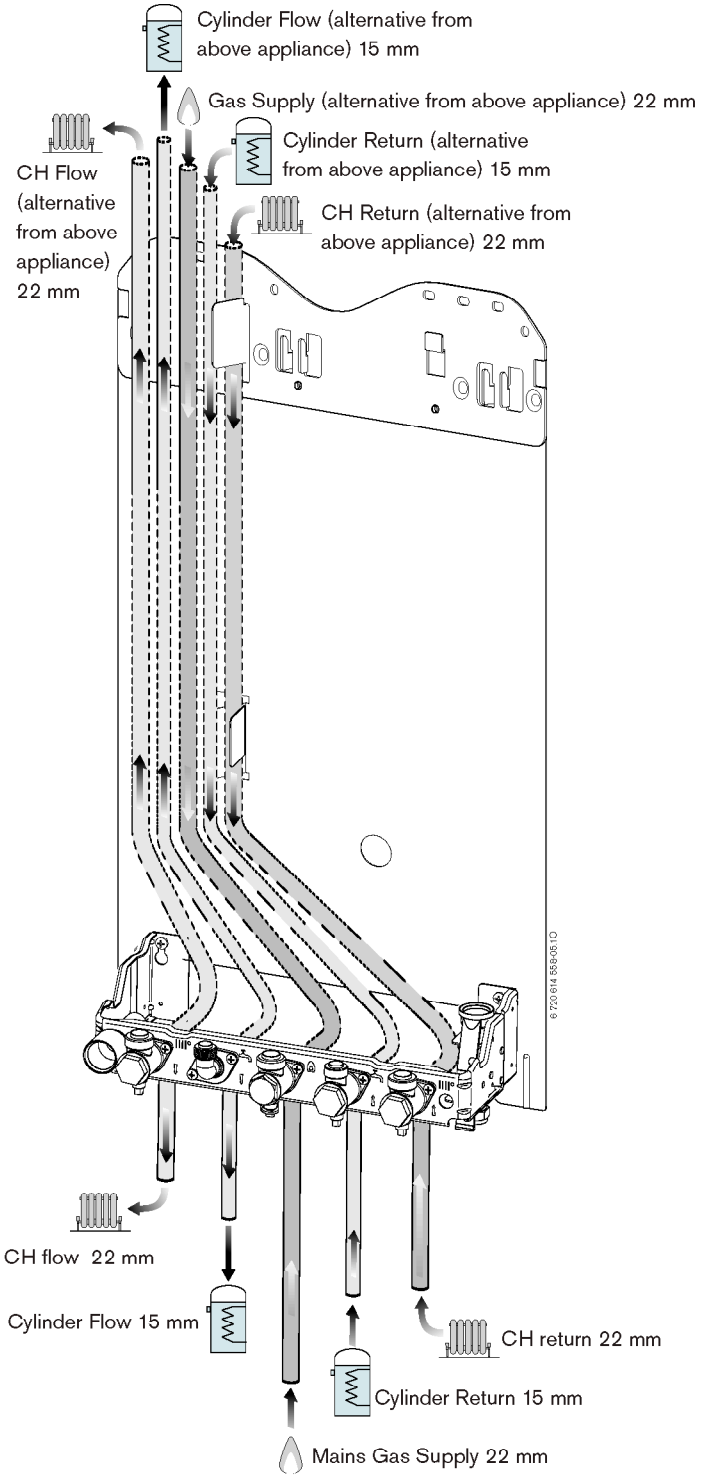

PLUMBING MANIFOLD

CONNECTIONS:

Heating System:	22 mm compression fittings
DHW:	15 mm compression fittings
Gas:	22 mm compression fittings

Use the fittings supplied in the Hardware pack.

PREPLUMBING

With the plumbing manifold installed, pipework can be installed to the valves on the manifold.
The valves can be closed enabling CH system to be tested. The boiler can be installed at later date.

RUNNING PIPES BEHIND THE BOILER

If the boiler pipes are to be run behind the appliance ensure that the pipes pass close to the wall as shown in the diagram opposite, and within the pipe guide.

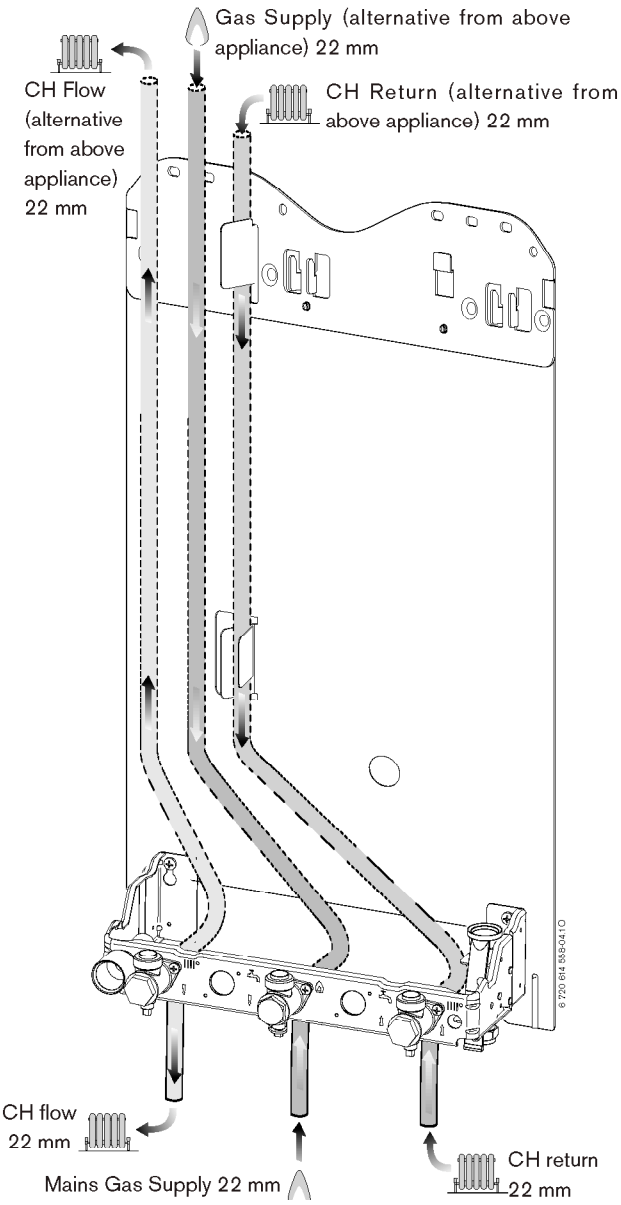

Minimum dimensions of flue terminal positions for balanced room sealed flues with fanned draught:

DRWG. REF:	TERMINAL POSITION	DISTANCE
A[1]	Directly below an opening, air brick, opening windows, etc.	300mm
B[1]	Above an opening, air brick, opening window, etc.	300 mm
C[1]	Horizontally to an opening, air brick, opening window, etc.	300 mm
D	Below gutters, soil pipes or drain pipes	75mm
E	Below eaves	200mm
F[2]	Below balconies or car port roof (lowest point)	200mm
G	From a vertical drain pipe or soil pipe	150mm
H	From an internal or external corner	300mm
I	Above ground, roof or balcony	300mm
J	From a surface facing the terminal	600mm
K	From a terminal facing the terminal	1200mm
L[2]	From an opening in the car port (e.g. door, window) into the dwelling	1200mm
M	Vertically from a terminal on the same wall	1500mm
N	Horizontally from a terminal on the same wall	300mm
O	From a non combustible vertical structure on the roof	*
P	Above intersection with roof	*
Q	Adjacent to windows or openings on pitched and flat roofs	600mm
R	Below windows or openings on pitched roofs	2000mm

1 In addition, the terminal should not be nearer than 150mm (fanned draught) to an opening in the building fabric formed for the purpose of accommodating a built-in element such as a window frame.

2 Not recommended.

* *See instructions supplied with vertical flue kits.*

- The flue must be fitted and terminated in accordance with the recommendations of BS5440 : Part 1.
- The flue must not cause an obstruction.
- Discharge and any noise from the flue outlet must not cause a nuisance.
- Flue gases have a tendency to plume and in certain weather conditions a white plume of condensation will be discharged from the flue outlet. Where this could be a nuisance, for example, near security lighting, an alternate position should be found.
- The air inlet/outlet duct and the terminal of the boiler must not be closer than 25mm to any combustible material.
  Detailed recommendations on protection of combustible materials are given in BS 5440:1
- A protective terminal guard must be fitted if the terminal is 2m or less above a surface to which people have access.
  The guard must be spaced equally (minimum 50 mm) around the flue and fixed to the wall with plated screws. See Contact Information (inside front cover).

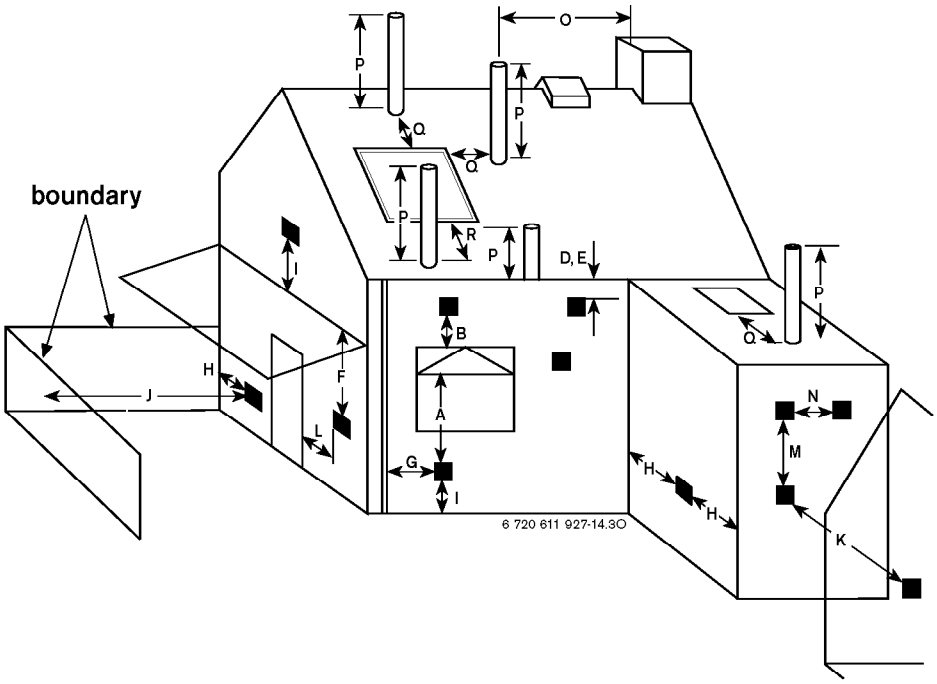

FLUE OPTIONS

- The diagrams (opposite) show the components used and the maximum flue length for each configuration of 100 mm and 125 mm Ø flues.
- Shaded flue components indicate the standard 100 mm Ø horizontal flue.
- Only straight flue sections can be reduced in length and cut.
- The flue terminal end can be fitted from the inside or outside of the building.
- Fixing kits are supplied with the flue extension kits.
- Horizontal 125 mm Ø and Vertical 100 mm and 125 mm Ø flue kits are available with separate instructions. Contact your supplier or Worcester Bosch.

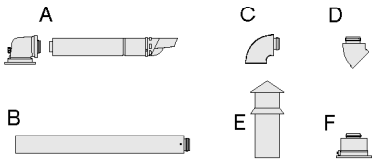

A - Standard horizontal flue (100 mm Ø shown)
B - Straight flue extension
C - Flue bend, 90°
D - Flue bends, 45°
E - Vertical terminal (vertical adaptor supplied with terminal)
F - Vertical adaptor (used with horizontal terminal)

Calculating the flue length:
Measure the total flue length required, noting that the maximum straight flue length including the terminal is:
Horizontal 60/100 mm Ø: 7900 mm
Horizontal 80/125 mm Ø: 18500 mm
Vertical 60/100 mm Ø: 9400 mm
Vertical 80/125 mm Ø: 18500 mm

Then reduce the total straight flue length for each extra flue bend (excluding the turret) by:
2000 mm for 90°
1000 mm for 45°

Flue extension **total** lengths:
Horizontal & Vertical 60/100 mm Ø: 960 mm
Horizontal & Vertical 80/125 mm Ø: 1000 mm

Flue terminal **total** lengths:
Horizontal 60/100 mm Ø: 800 mm
Horizontal 80/125 mm Ø: 1200 mm
Vertical 60/100 mm Ø: 1140 mm
Vertical 80/125 mm Ø: 1365 mm

STANDARD FLUE HORIZONTAL

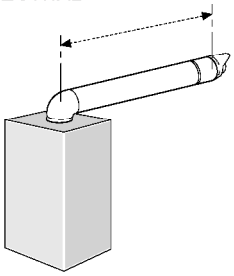

Ø100
MAX 686 mm A x 1
MIN 250 mm A x 1*

Ø125
MAX 1070 mm A x 1
MIN 250 mm A x 1*
* Requires cutting

MAXIMUM FLUE HORIZONTAL

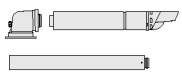

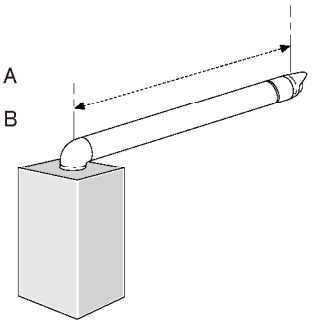

Ø100 - 7900 mm
A x 1 + B x 8

Ø125 - 18500 mm
A x 1 + B x 18

MAXIMUM FLUE VERTICAL START + 1 BEND

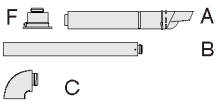

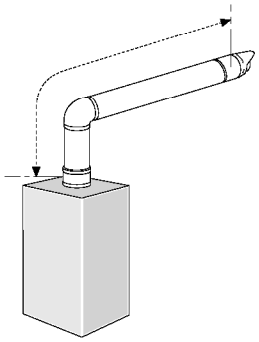

Ø100 - 7900 mm
A x 1 + C x 1 + B x 9 + F x 1

Ø125 - 18500 mm
A x 1 + C x 1 + B x 19 + F x 1

MAXIMUM FLUE HORIZONTAL + 1 BEND

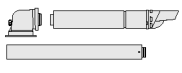

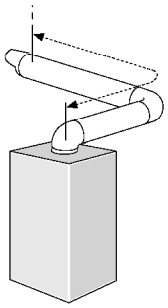

Ø100 - 5900 mm
A x 1 + B x 7 + C x 1

Ø125 - 16500 mm
A x 1 + B x 17 + C x 1

MAXIMUM FLUE VERTICAL START + 2 BENDS

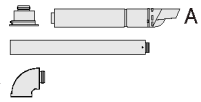

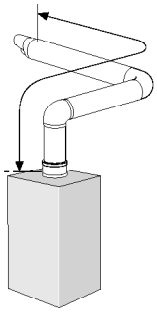

Ø100 - 5900 mm
A x 1 + C x 2 + B x 8 + F x 1

Ø125 - 16500 mm
A x 1 + C x 2 + B x 18 + F x 1

MAXIMUM FLUE VERTICAL START + 3 BENDS

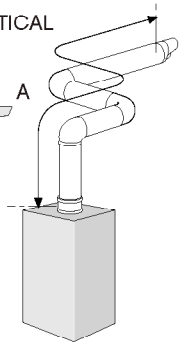

Ø100 - 3900 mm
A x 1 + C x 3 + B x 7 + F x 1

Ø125 - 14500 mm
A x 1 + C x 3 + B x 17 + F x 1

MAXIMUM FLUE VERTICAL WITH 2 X 45° BENDS

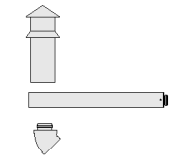

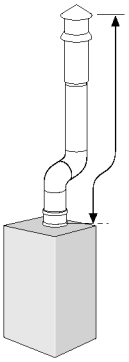

Ø100 - 7400 mm
(including terminal)
B x 8 + D x 2 + E x 1

Ø125 - 16500 mm
(including terminal)
B x 17 + D x 2 + E x 1

VERTICAL FLUE WITH 2 X 90° BENDS

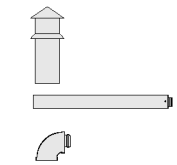

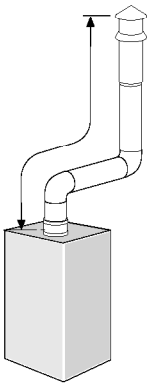

Ø100 - 5400 mm
(including terminal)
B x 7 + C x 2 + E x 1

Ø125 - 14500 mm
(including terminal)
B x 16 + C x 2 + E x 1

6 720 611 927-08.1O

PRE - INSTALLATION

IMPORTANT: All the previous Pre-Installation sections must be read and requirements met before starting boiler or flue installation.

UNPACKING WALL FRAME AND ANCILLARY ITEMS

LIFTING AND CARRYING PRECAUTIONS:

- Lift only a manageable weight, or ask for help.
- When lifting the boiler, bend the knees, and keep the back straight and feet apart.
- Do not lift and twist at the same time.
- Lift and carry the boiler close to the body.
- Wear protective clothing and gloves to protect from any sharp edges.

A - Carton
B - Wall mounting plate
C - Hanging bracket
D - Pre-plumbing manifold
E - Hardware pack
F - Literature pack
G - Bottom panel
H - Trap / Syphon Outlet Connection (22 mm Plastic Pipe)
I - Upper support (polystyrene)

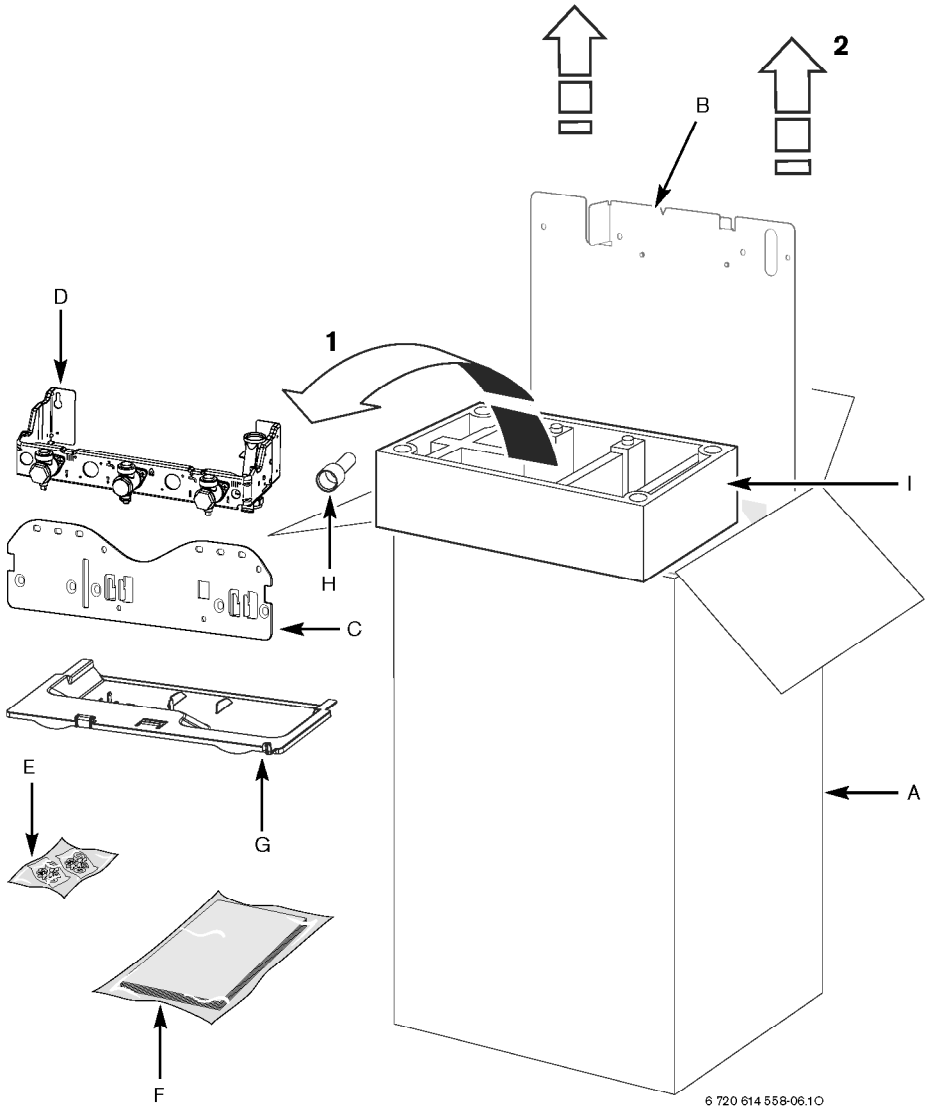

IMPORTANT HANDLING INSTRUCTIONS

- It is advised that two people are used to carry the carton from the van to the point of delivery.
- Once the carton has been delivered, the top of the carton is opened. If a sharp implement is used make sure the carton is not pierced and that the implement is used in such a way so that it may not cause personal injury. All sharp objects must be covered or the blade retracted after use and put away in a safe place.

▶ **1.** The upper support is now removed with the components (bottom panel, pre-plumbing manifold, fixings, documentation set, charging link, hanging bracket).

▶ **2.** The boiler wall mounting plate can now be pulled out.

Additional requirements for roof space installation:

- The boiler should be first unpacked before ascending ladder to loft space.
- Two sets of steps should be used.
- Two people should share the lifting of the boiler up to the loft hatch, where the boiler is entered into the loft space tilted and slid on its back into the loft.

Once the appliance is removed from its packaging check the contents against the packing list.

Before installing appliance ensure system has been cleaned as explained on page 9.

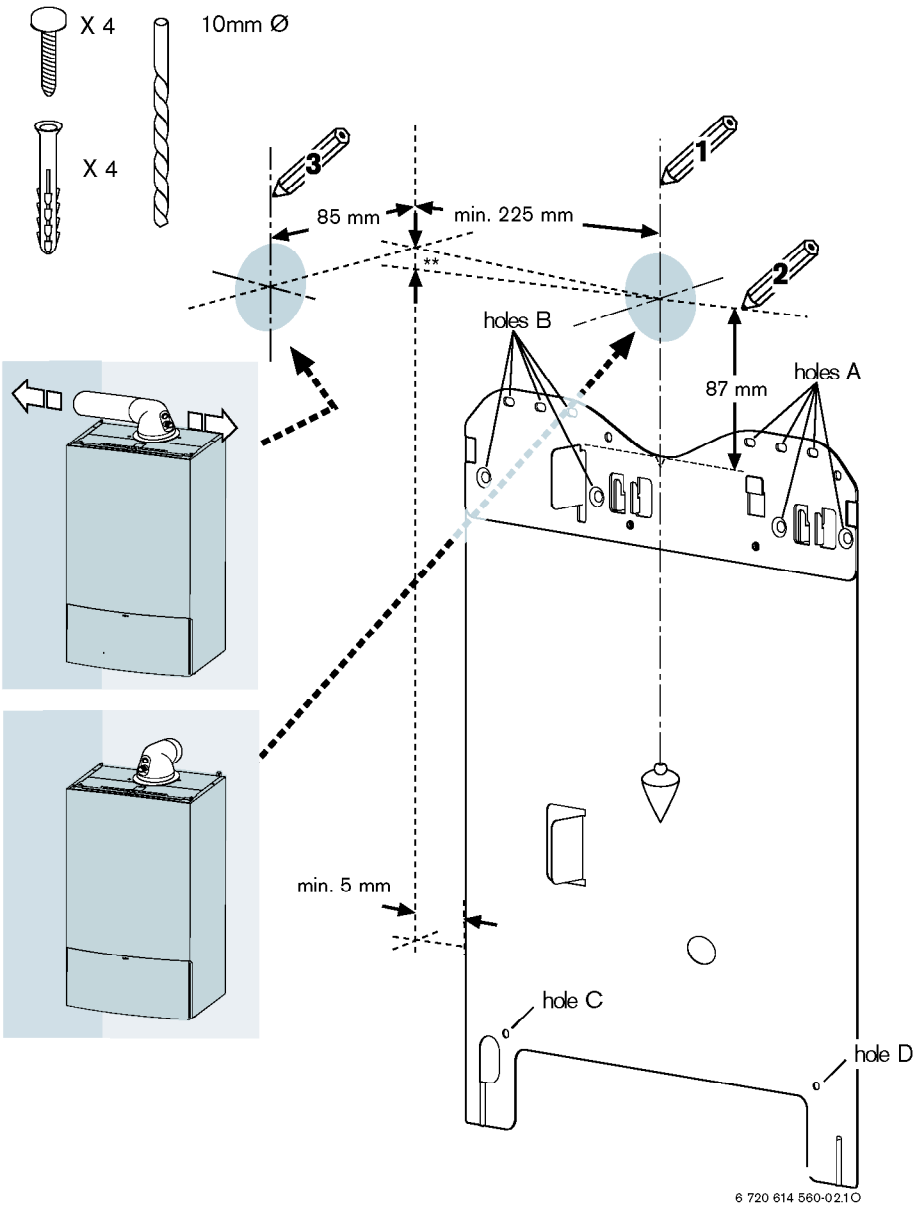

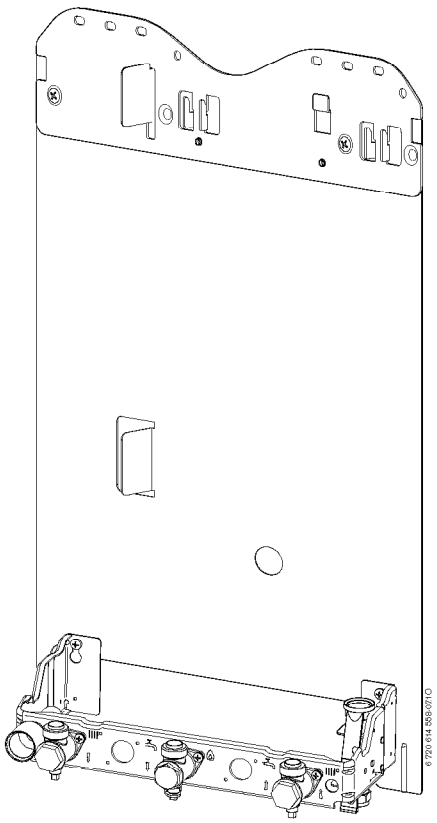

WALL MOUNTING PLATE

FLUE OPENING

CAUTION: Ensure there are no pipes, electric cables, damp proof courses or other hazards before drilling.

SAFETY:
All relevant safety precautions must be undertaken. Protective clothing, footwear, gloves and safety goggles must be worn as appropriate.

FIXING THE POSITION OF THE WALL MOUNTING PLATE:

- The diagram opposite shows the relative positions of the flue and the fixing of the wall mounting plate, the mounting plate and pre-plumbing manifold.
- ▶ Place the hanging bracket on the wall mounting plate.
- ▶ Place the wall mounting plate with hanging bracket against the wall in the desired position.
- ▶ Mark 4 fixing points through
  - one of the holes A
  - one of the holes B
  - hole C
  - hole D

  in the wall mounting plate/hanging bracket.
- ▶ Drill the 4 holes for wall mounting plate, wall hanging bracket and pre-plumbing manifold.
- ▶ Secure wall mounting plate with hanging bracket with 4 screws (supplied with the boiler). Do not fully fasten the lower 2 screws.

FLUE OUTLET

- ▶ Follow the diagram opposite to mark the centre of the flue for rear outlet (1, & 2) or for side outlet (2 & 3).
  ** Note: increase this height by 52 mm for every 1000 mm of horizontal length that the flue outlet is away from the boiler.
- ▶ For the 60/100 mm Ø flue make a 125 mm diameter hole through the wall using a core drill or similar.
  For flues using an optional weather collar, fitted from inside the building make a 150 mm Ø hole.
- ▶ Clear away any debris.

FIXING THE PRE-PLUMBING MANIFOLD:

- ▶ Mount the pre-plumbing manifold on the 2 lower screws and secure the screws.

UNPACKING THE APPLIANCE

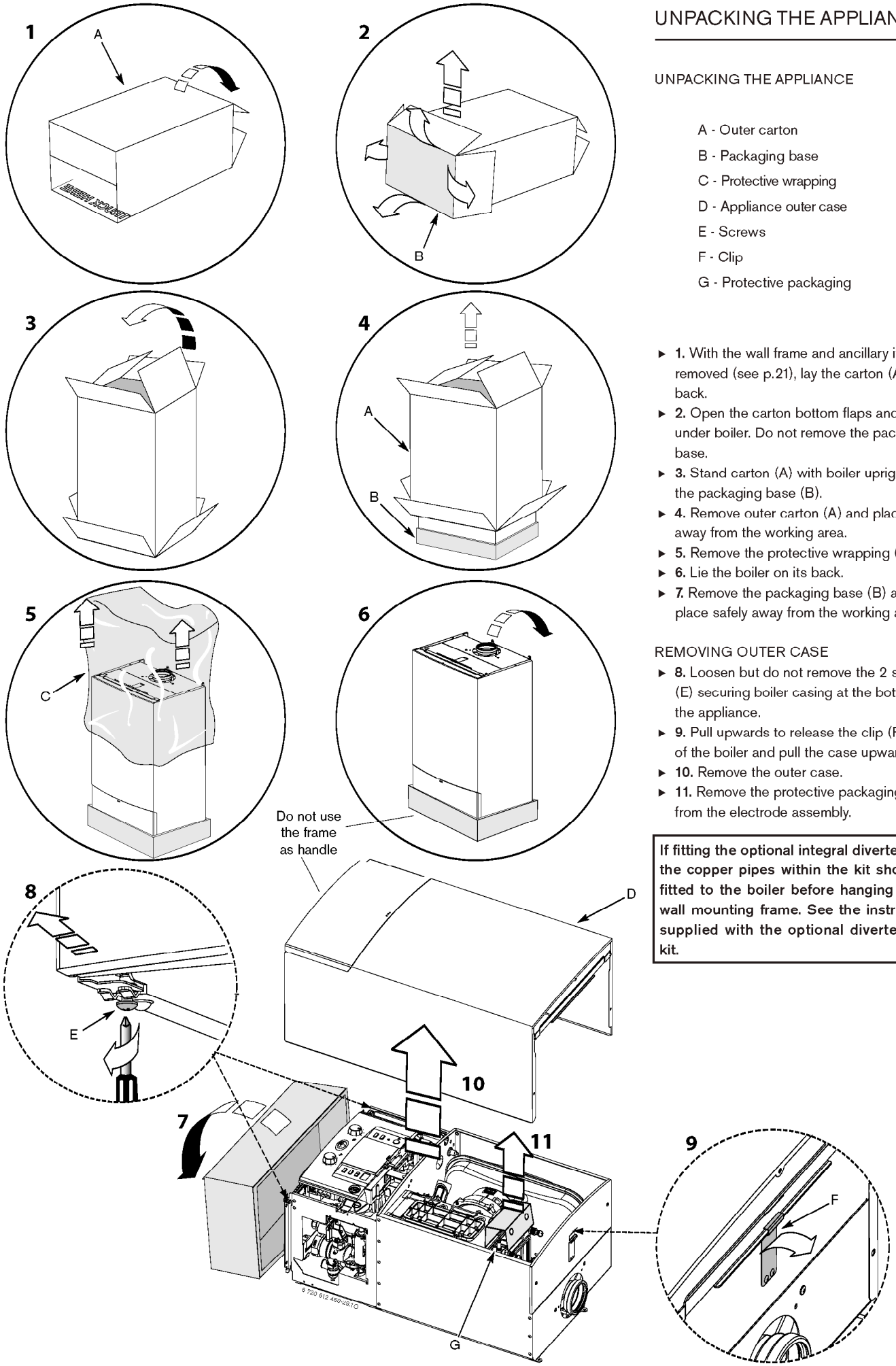

UNPACKING THE APPLIANCE

A - Outer carton
B - Packaging base
C - Protective wrapping
D - Appliance outer case
E - Screws
F - Clip
G - Protective packaging

- **1.** With the wall frame and ancillary items removed (see p.21), lay the carton (A) on its back.
- **2.** Open the carton bottom flaps and fold under boiler. Do not remove the packaging base.
- **3.** Stand carton (A) with boiler upright on the packaging base (B).
- **4.** Remove outer carton (A) and place safely away from the working area.
- **5.** Remove the protective wrapping (C)
- **6.** Lie the boiler on its back.
- **7.** Remove the packaging base (B) and place safely away from the working area.

REMOVING OUTER CASE

- **8.** Loosen but do not remove the 2 screws (E) securing boiler casing at the bottom of the appliance.
- **9.** Pull upwards to release the clip (F) on top of the boiler and pull the case upwards.
- **10.** Remove the outer case.
- **11.** Remove the protective packaging (G) from the electrode assembly.

If fitting the optional integral diverter valve, the copper pipes within the kit should be fitted to the boiler before hanging on the wall mounting frame. See the instructions supplied with the optional diverter valve kit.

BOILER CONNECTIONS

CAUTION: ISOLATE THE MAINS GAS SUPPLY BEFORE STARTING ANY WORK AND OBSERVE ALL RELEVANT SAFETY PRECAUTIONS.

GAS AND WATER CONNECTIONS:

- System pipes may be run vertically upwards behind the boiler or below it. See Plumbing Manifold Section on page 15.

  A - CH flow (22 mm),
  B - CH return (22 mm),
  C - Gas inlet (22 mm),

If optional diverter valve is to be fitted (**1.1** and **5.1**):
  D - Cylinder flow (15 mm),
  E - Cylinder return (15 mm)

- **1.** Fit sealing washers to service valves before hanging boiler.
- Remove dust caps from connections on boiler.

NOTE: The accessibility to the preplumbing manifold can be improved by removing the condensate trap (see also page 39).

IMPORTANT: Before hanging the boiler onto the wall mounting plate ensure that the pressure relief valve connection is in the DOWN position. This is located on the right hand side of the wall frame at the rear.

- **2.** Pull the extended tab/lever forward and down until there is no further travel.
- **3.** Hang the boiler on to the hanging bracket. The lugs pass through the rectangular holes in the boiler back panel.
  Take care not to disturb the washers on the connections.
  NOTE: *It is recommended that this lifting operation is carried out by 2 people, observing all precautions for the safe lifting of heavy objects.*
  Do not lift by the top case panel. There are two handling holes incorporated into the inner casing left and right in the lower section of the appliance.
- **4.** Lower the control panel into the service position by removing the screw (X) from the retaining bracket.
- **5.** Make connections to the heating system.
- Connect the gas supply to the boiler gas cock 22 mm compression.
- **5.1.** If optional diverter valve is to be fitted: Connect cylinder flow and return.

IMPORTANT: The pressure relief connector must be repositioned after the boiler has been correctly mounted to the wall mounting plate.

- **6.** Push the lever on the pressure relief connector UP until the stop on the inside of the handle is over the shoulder of the metal bracket to secure in place.

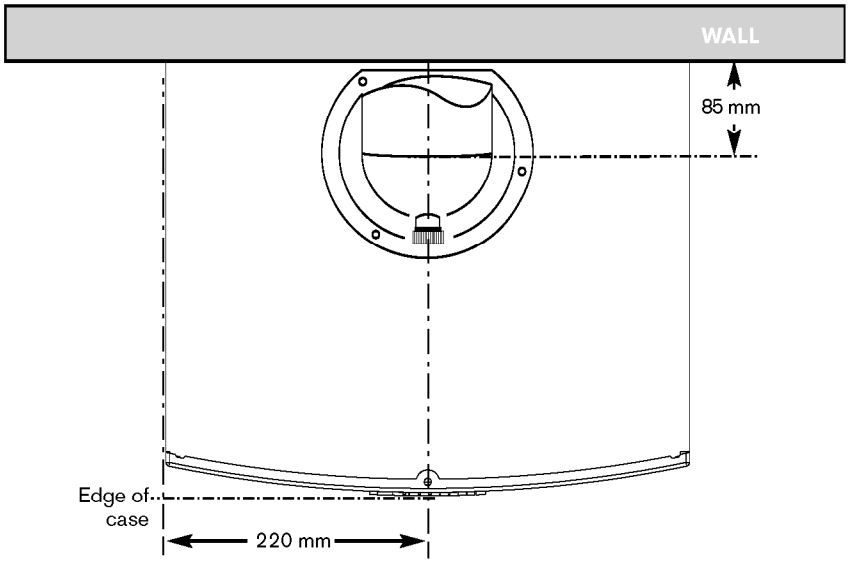

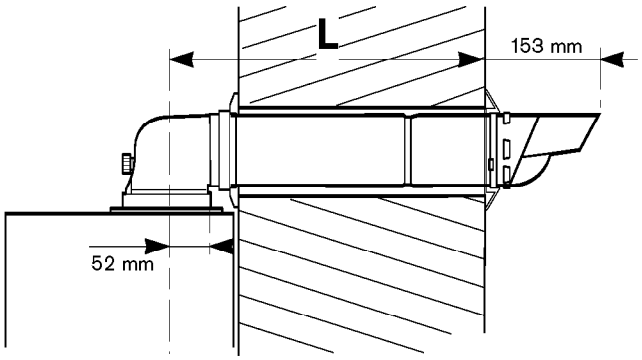

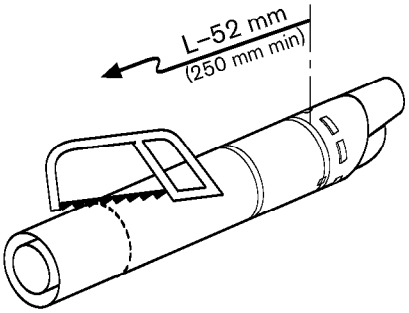

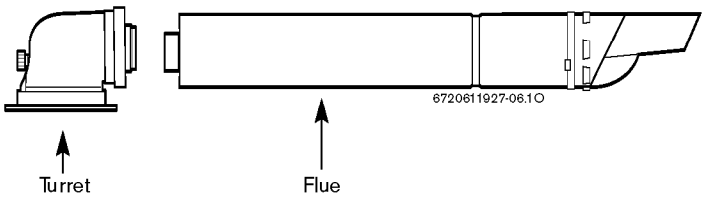

FLUE INSTALLATION

HORIZONTAL FLUE
(60/100 mm diameter)
For vertical flues and 80/125 mm horizontal flues, please refer to separate Flue Kit instructions.
NOTE: to ease the assembly of flue components, apply silicone lubricant to sealing surfaces.
The instructions for the 60/100 mm diameter flue are shown below.

MEASURING THE FLUE (Standard Flue):

- Measure from the outside wall to the centre line of the flue turret (length L).
- Subtract 52 mm from the length L to give the correct dimension to the flue elbow connection.
- The terminal section should be cut to this dimension, however it must not be shorter than 250 mm.
- After cutting the end must be square and free from burrs to prevent damage to the flue seals.

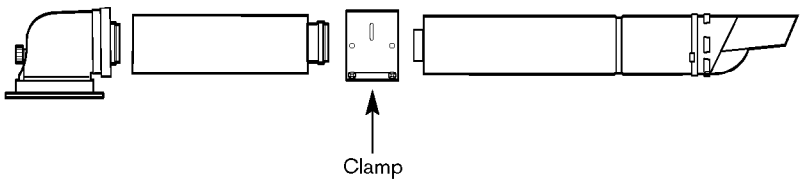

MEASURING THE FLUE (Extension Flue Kits):

ONLY CUT EXTENDED FLUE LENGTHS

- As with the Standard Flue measure from the outside wall to the centre line of the flue turret (length L).
- Subtract the usable length of the standard flue (634 mm) from length L.
- Subtract the usable length of the turret (52 mm) from length L.
- Subtract 960 mm for each full length extension from the figure.
- Cut one of the extensions to the remainder.
- Cut both tubes square taking care not to distort the tubes.
- Remove any burrs.

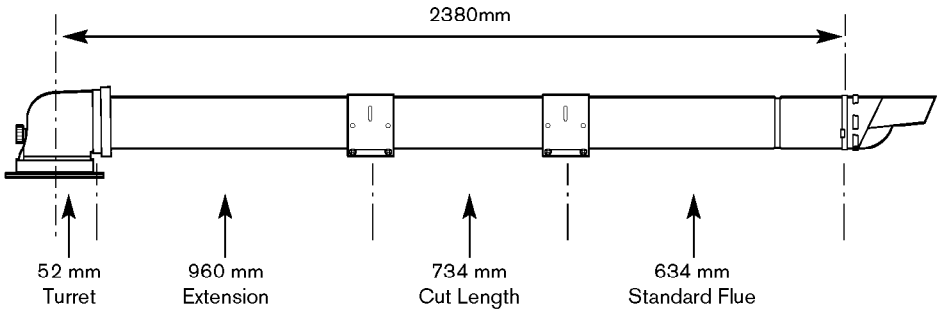

EXAMPLE:

Length L	=	2380 mm
Subtract Standard Flue		– 634 mm
Subtract Turret		– 52 mm
Subtract Full Extension		– 960 mm
Cut Length	=	**734 mm**

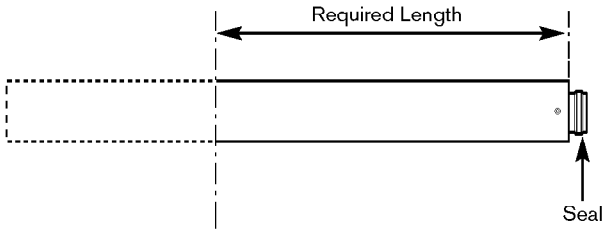

NOTE: Where extensions are reduced, cut length which **DOES NOT** contain the seal.

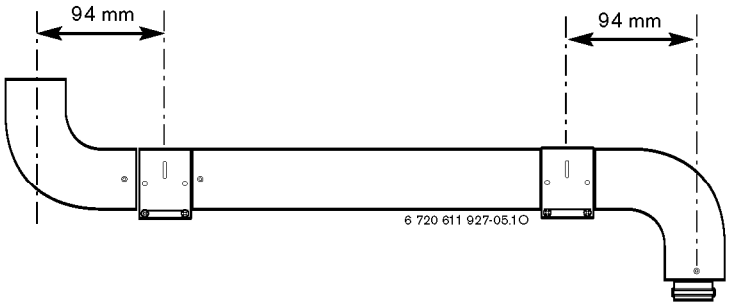

ADDITION OF FLUE BENDS:

When flue bends are being used an allowance of 94 mm per bend must be allowed from the centre line of the bend. In the example shown using a flue extension (960 mm) with 2 bends will achieve a total length of 1148 mm.

A - Standard Flue

B - Internal Wall Seal

C - External Wall Seal

D - Clamp

E - Extension Duct

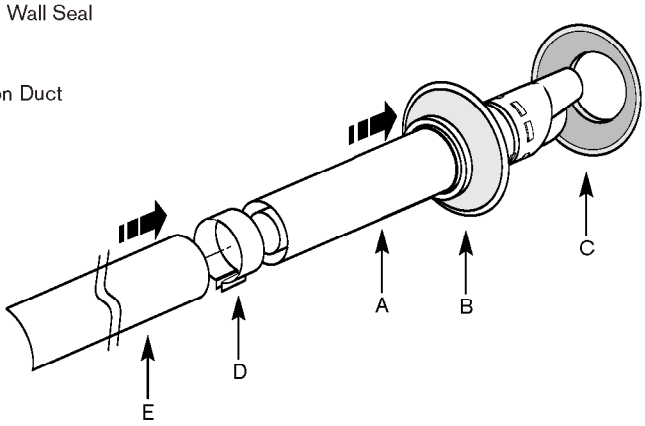

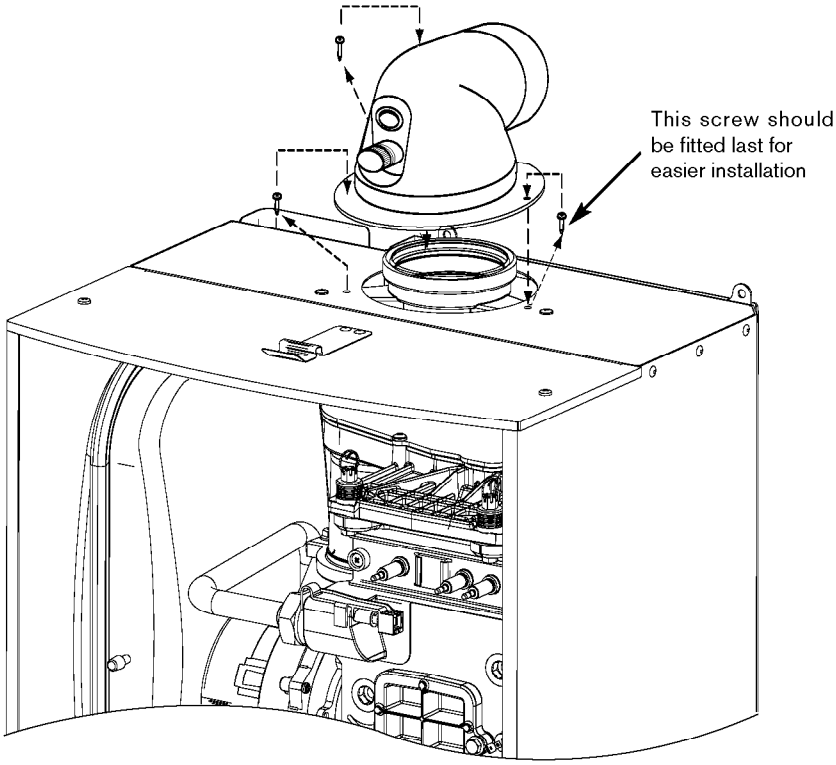

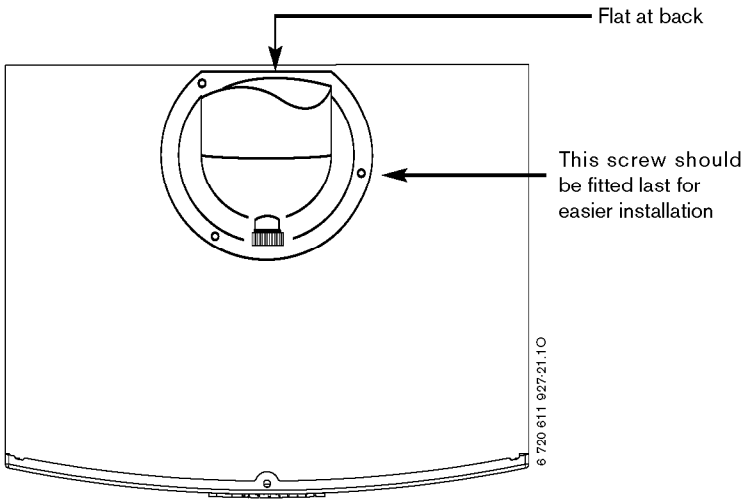

ASSEMBLING THE FLUE

1 Slide inner collar (B) onto terminal (A)
2 Additional extensions or bends:
Push fit all extensions/bends/terminal together and secure connections with clamps (D). The slope of the terminal outlet must face downwards.

FITTING THE FLUE

3 Fit the terminal (A) through the flue opening in the wall, exposing the plastic outlet section to the outside and fit the outer flue collar (C) over the notches to secure.

4 Assemble turret to boiler using the three screws (see below).
Note: Screws are in boiler or in flue kit.

FITTING THE TURRET:

- Flue turret should push directly down and not be twisted into correct position.
- ▸ Fit turret onto appliance and retain with three screws.
NOTE: The clamping plate flat should be at the rear of the appliance.

ADDITIONAL NOTES AND REMINDERS:

- Ensure that all cut lengths are square and free from burrs.
- The flue, when assembled, is fully sealed and components are pushed home.
- The flue is set at an angle of 3° or 52 mm per additional 1m length of extension used.

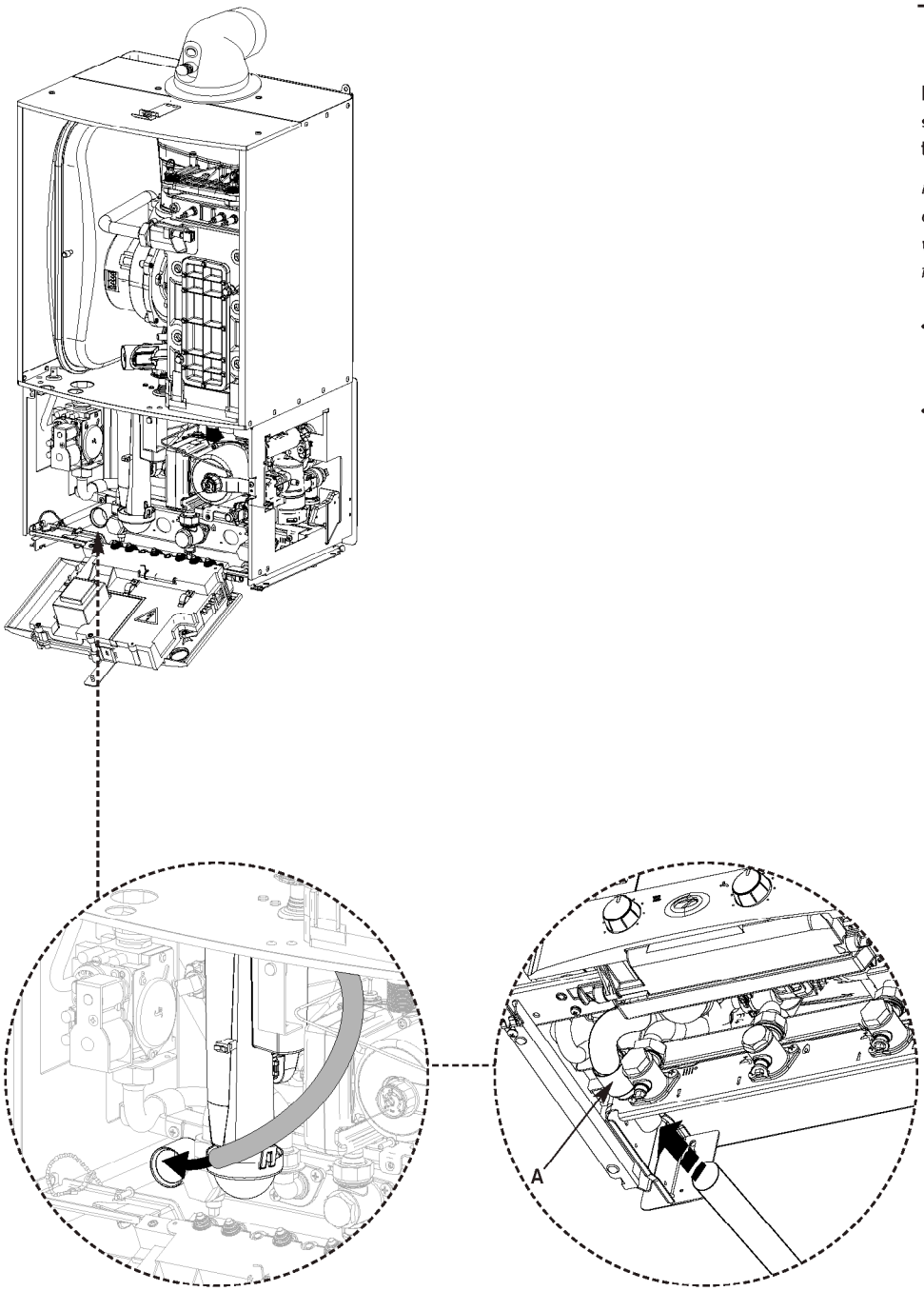

Never terminate or discharge into any open source, including; sink, bath, shower, bidet, toilet etc.

Note: any external condensate pipework of excessive runs should be protected with weather resistant insulation to help prevent freezing.

- Ensure that the condensate drain is 22 mm diameter plastic pipe. It must fall at least 50 mm per metre towards the outlet.
- An adapter (A) in 22 mm pipe is contained in the fitting pack.

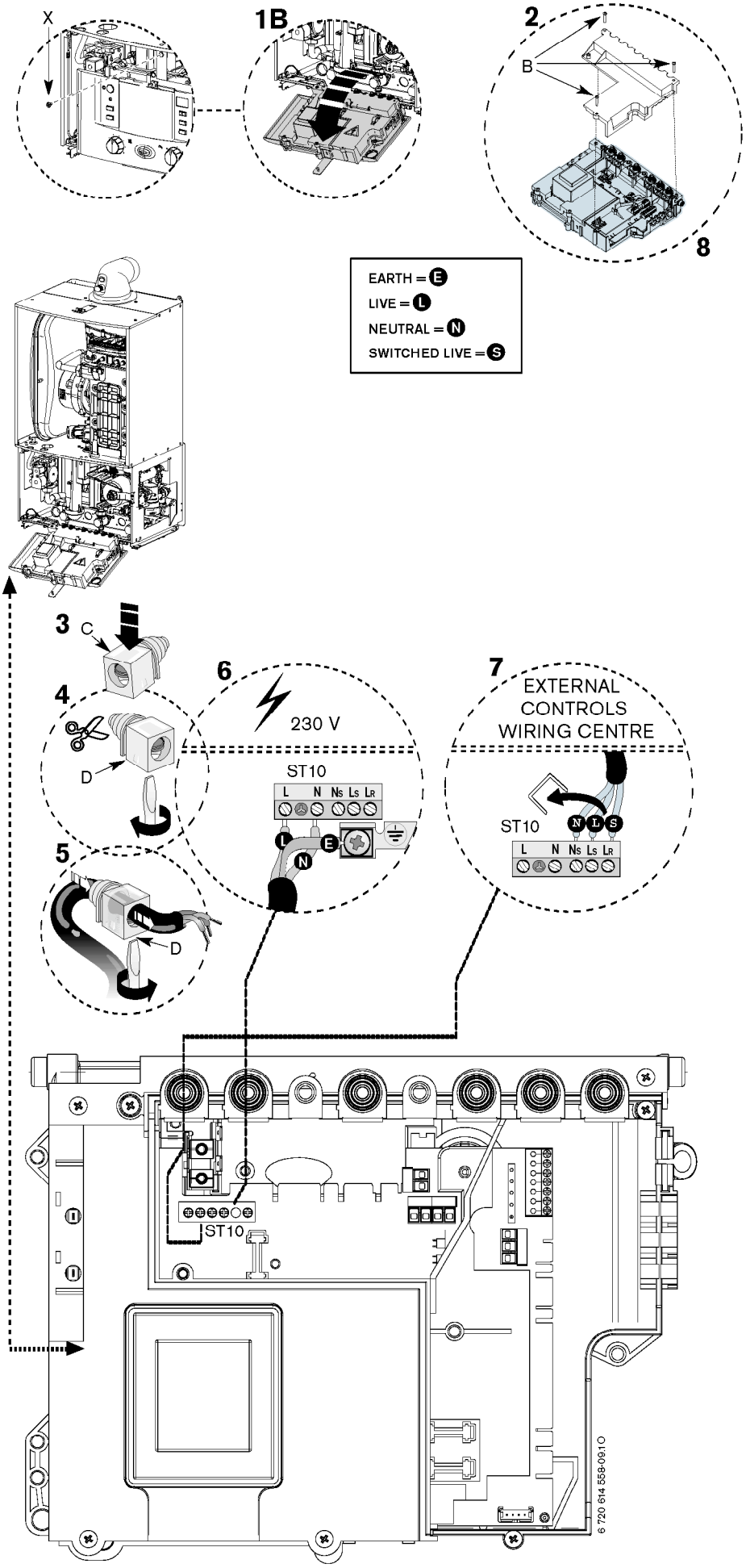

ELECTRICAL

(WITHOUT DIVERTER VALVE)

CAUTION: ISOLATE THE MAINS ELECTRICITY SUPPLY BEFORE STARTING ANY WORK AND OBSERVE ALL RELEVANT SAFETY PRECAUTIONS

Danger of short circuit: When connecting the cables ensure that no cable pieces fall into the Heatronic.

Note: Mains supply to the boiler must be through a fused double pole isolator situated adjacent to the appliance. The isolator must have a contact separation of 3 mm minimum in all poles.

Access to electrical connections:

- ► Remove boiler casing to access control panel.

1. Lower the control panel into the service position by removing the screw (X) from the retaining bracket.
2. Unscrew the three screws (B) on the back of the control panel and pull off the connections cover.
3. Unclip cable clamp (C).
4. Cut off the tapered cable entry to fit cable diameter required.
5. Turn cable retaining screw (D) anti-clockwise. Run cable over the main crossbar and through the cable clamp (C), ensuring there is ample cable to reach the connectors. Turn cable clamping screw (D) clockwise to secure cable and replace clamp (C) into control panel.
6. Mains power 230 V connection (ST10):

- ► Separate wires from cable end and strip to 6 mm
- ► Connect LIVE wire to terminal (L)
- ► Connect NEUTRAL wire to the terminal (N)
- ► Connect EARTH wire to the earth connector (⏚)

NOTE: Earth cable to be longer so that it pulls out last if mains cable is snagged.

7. External controls wiring box (ST10):

- ► Remove link
- ► Connect wiring box LIVE supply to terminal (Ls)
- ► Connect wiring box LIVE return to terminal (LR)
- ► Connect wiring box NEUTRAL to terminal (Ns)

8. Refit control panel cover:

- ► Refit panel and secure with screws (B).
- ► Bring the control panel to its upper position and fix it with screw (A).

NOTES:

- Description of the wiring box see proprietary instructions.
- External diverter valve(s) and all other 230V parts are not supplied with the boiler.
- A facia mounted programmer/timer should not be fitted unless optional integral diverter valve is used (see next page).
- Refer to manufacturers instructions when connecting external parts to the wiring centre. British Gas cannot be held responsible for wiring errors.

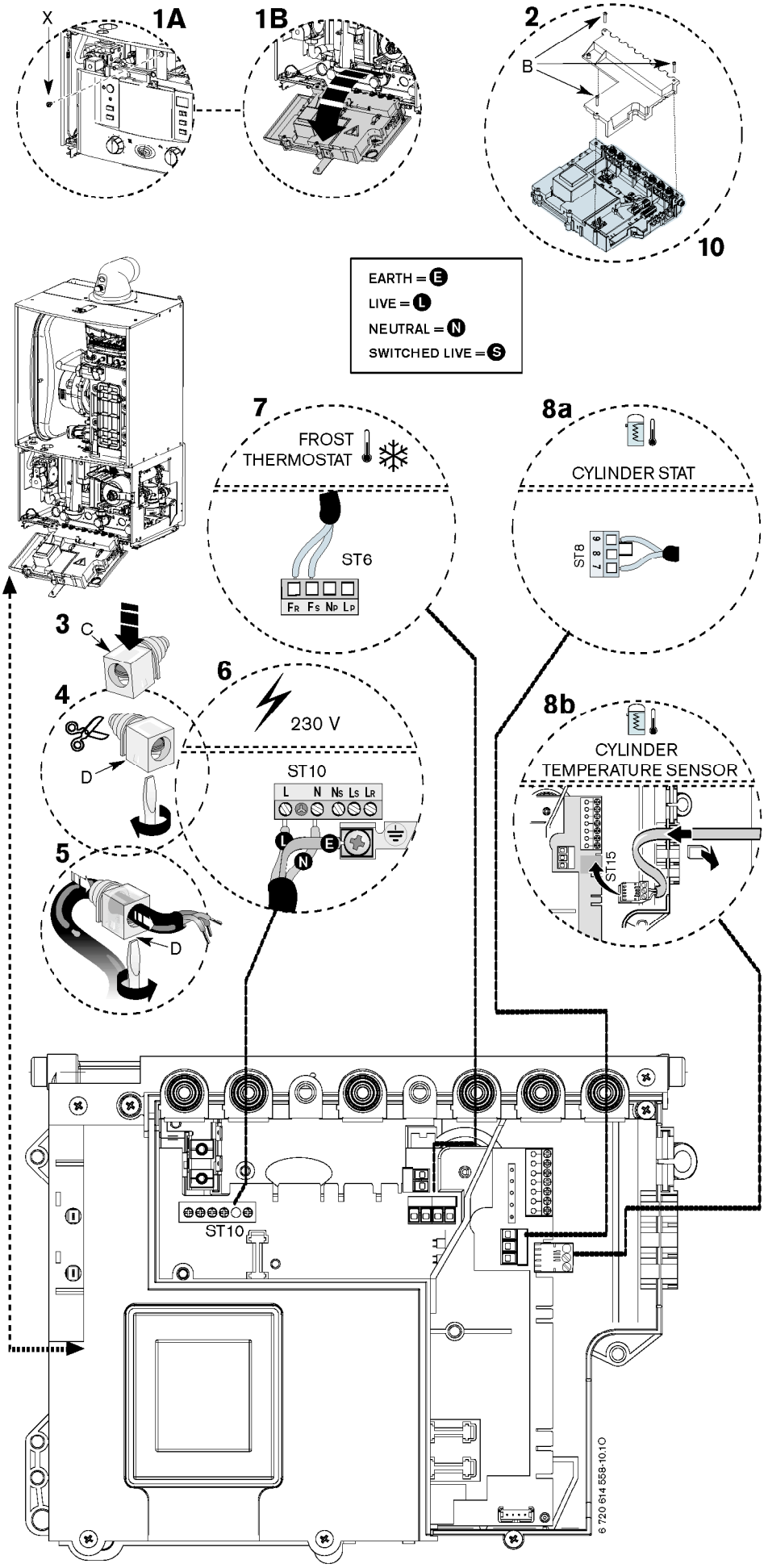

ELECTRICAL (WITH OPTIONAL DIVERTER VALVE)

CAUTION: ISOLATE THE MAINS ELECTRICITY SUPPLY BEFORE STARTING ANY WORK AND OBSERVE ALL RELEVANT SAFETY PRECAUTIONS

Danger of short circuit: When connecting the cables ensure that no cable pieces fall into the Heatronic.

Note: Mains supply to the boiler must be through a fused double pole isolator situated adjacent to the appliance. The isolator must have a contact separation of 3 mm minimum in all poles.

Access to electrical connections:

- ▶ Remove boiler casing to access control panel.

1. Lower the control panel into the service position by removing the screw (X) from the retaining bracket.
2. Unscrew the three screws (B) on the back of the control panel and pull off the connections cover.
3. Unclip cable clamp (C).
4. Cut off the tapered cable entry to fit cable diameter required.
5. Turn cable retaining screw (D) anti-clockwise. Run cable over the main crossbar and through the cable clamp (C), ensuring there is ample cable to reach the connectors. Turn cable clamping screw (D) clockwise to secure cable and replace clamp (C) into control panel.
6. Mains power 230 V connection (ST10):
   ▶Separate wires from cable end and strip to 6 mm
   ▶ Connect LIVE wire to terminal (L)
   ▶ Connect NEUTRAL wire to the terminal (N)
   ▶ Connect EARTH wire to the earth connector (⏚)
   NOTE: Earth cable to be longer so that it pulls out last if mains cable is snagged.
7. Optional external frost thermostat connection (ST6):
   ▶ Connect frost thermostat supply wire to terminal (FS)
   ▶ Connect frost thermostat return wire to terminal (FR)
8. Cylinder stat or cylinder temperature sensor:

8a ▶ Hot water channel Volt-free cylinder stat (ST8): Cylinder Stat wires to terminals 7 and 9.
NOTES: ***Do not break the link on terminals 8 and 9.***
The cylinder stat must be volt-free, i.e. not connected to any voltage source.
Do not set the cylinder stat to temperatures above 70°C, to avoid very long cylinder heating periods without CH function.

8b ▶ Hot water cylinder temperature sensor (ST15):
Connect the included plug to the cable. Snap out the plastic tongue and insert the cable.
Insert the plug on the PCB ST15.

10. Refit control panel cover:
- ▶ Refit panel and secure with screws (B).
- ▶ Bring the control panel to its upper position and fix it with screw (A).

INSTALLATION

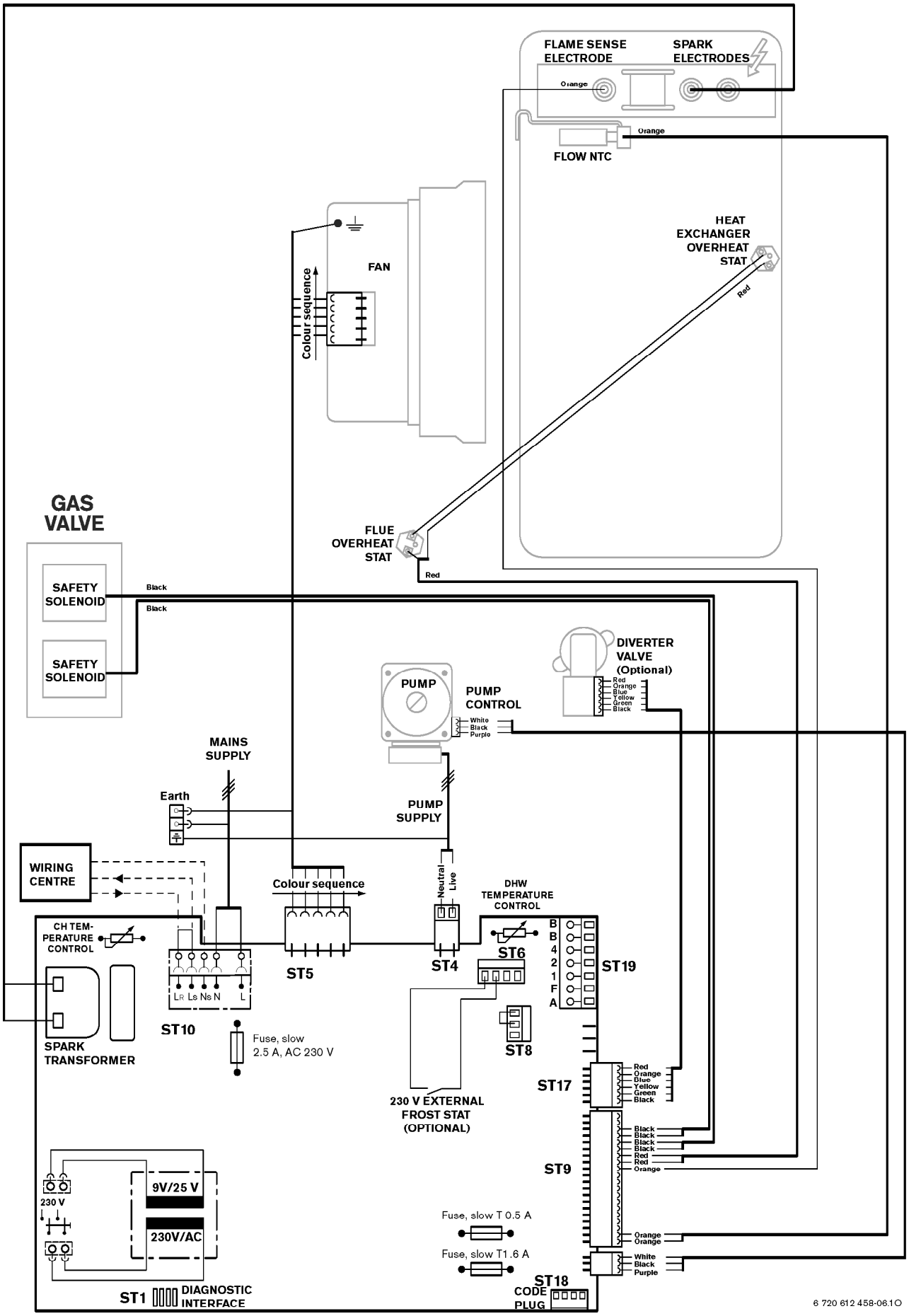
FLAME SENSE ELECTRODE
SPARK ELECTRODES
Orange
Orange
FLOW NTC
HEAT EXCHANGER OVERHEAT STAT
Red
FAN
Colour sequence
GAS VALVE
SAFETY SOLENOID
SAFETY SOLENOID
Black
Black
FLUE OVERHEAT STAT
Red
DIVERTER VALVE (Optional)
Red
Orange
Blue
Yellow
Green
Black
PUMP
PUMP CONTROL
White
Black
Purple
MAINS SUPPLY
Earth
PUMP SUPPLY
WIRING CENTRE
Colour sequence
Neutral
Live
DHW TEMPERATURE CONTROL
CH TEM-PERATURE CONTROL
ST5
ST4
ST6
ST19
B
B
4
2
1
F
A
LR Ls Ns N L
ST10
SPARK TRANSFORMER
Fuse, slow 2.5 A, AC 230 V
ST8
ST17
230 V EXTERNAL FROST STAT (OPTIONAL)
ST9
Black
Black
Black
Black
Red
Red
Orange
Orange
Orange
White
Black
Purple
230 V
9V/25 V
230V/AC
Fuse, slow T 0.5 A
Fuse, slow T1.6 A
ST1
DIAGNOSTIC INTERFACE
ST18
CODE PLUG
6 720 612 458-06.1O

CHECKS

CAUTION: ISOLATE THE MAINS SUPPLIES BEFORE STARTING ANY WORK AND OBSERVE ALL RELEVANT SAFETY PRECAUTIONS

- **1.** Check that the service and water pipes are connected to the correct position on the manifold.

  A - CH flow (22mm),
  B - CH return (22mm),
  C - Gas inlet (22mm),

- **2.** Check the gas type specified on the identification plate (F) matches that of the gas supply. Turn on the main gas supply, check the gas pipework, connections and rectify any leaks.
- **3.** Check that the pressure relief connector, located on the right hand side at the bottom of the wall frame, in its up position.
- **4.** Check that the condensate pipe has been connected to the adapter.

IMPORTANT: If the boiler is not to be commissioned immediately then: after sucessfully completing all of the checks and any rectification work, close the gas and water valves, shut off the gas supply and electrically isolate the boiler.

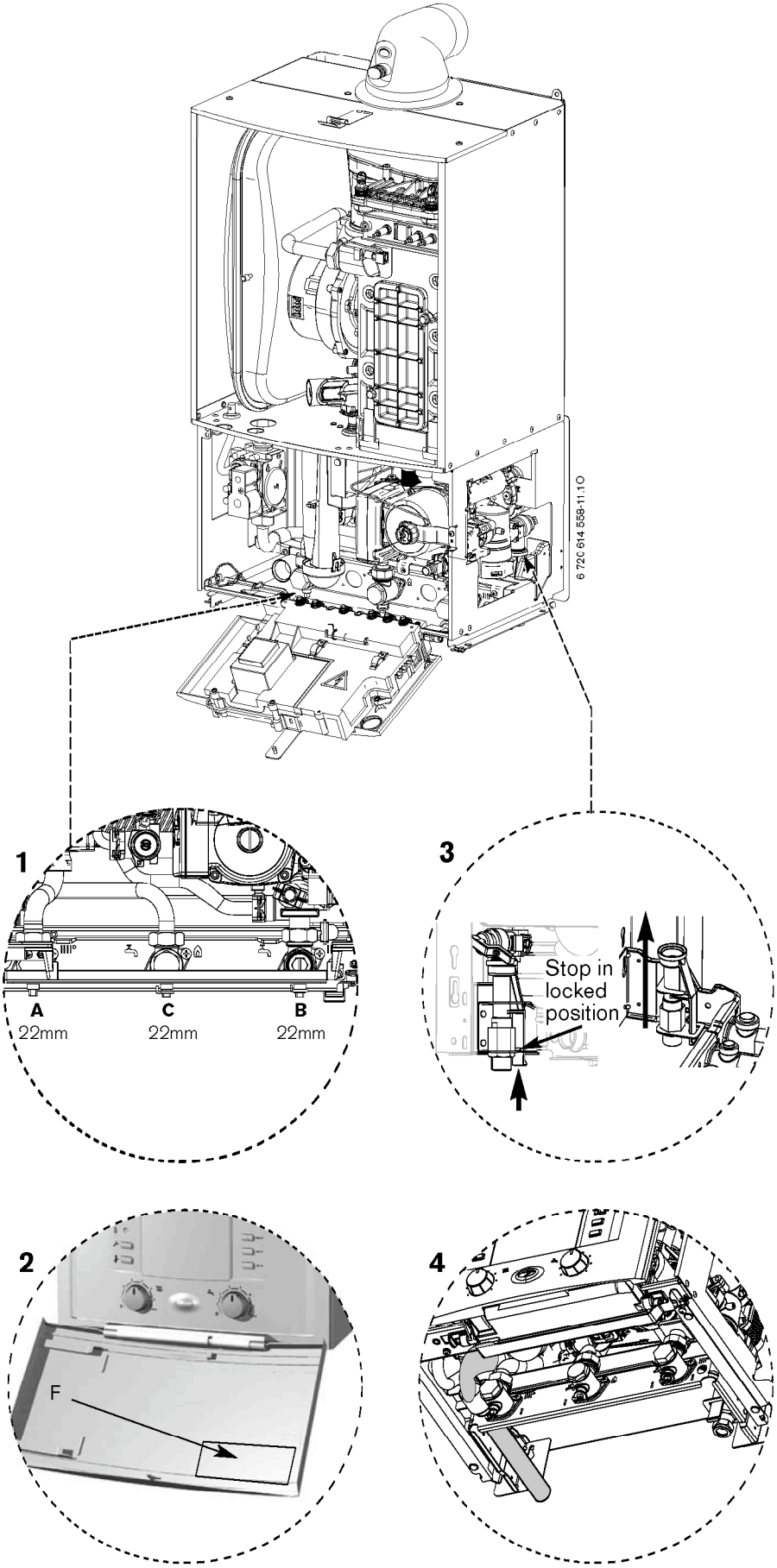

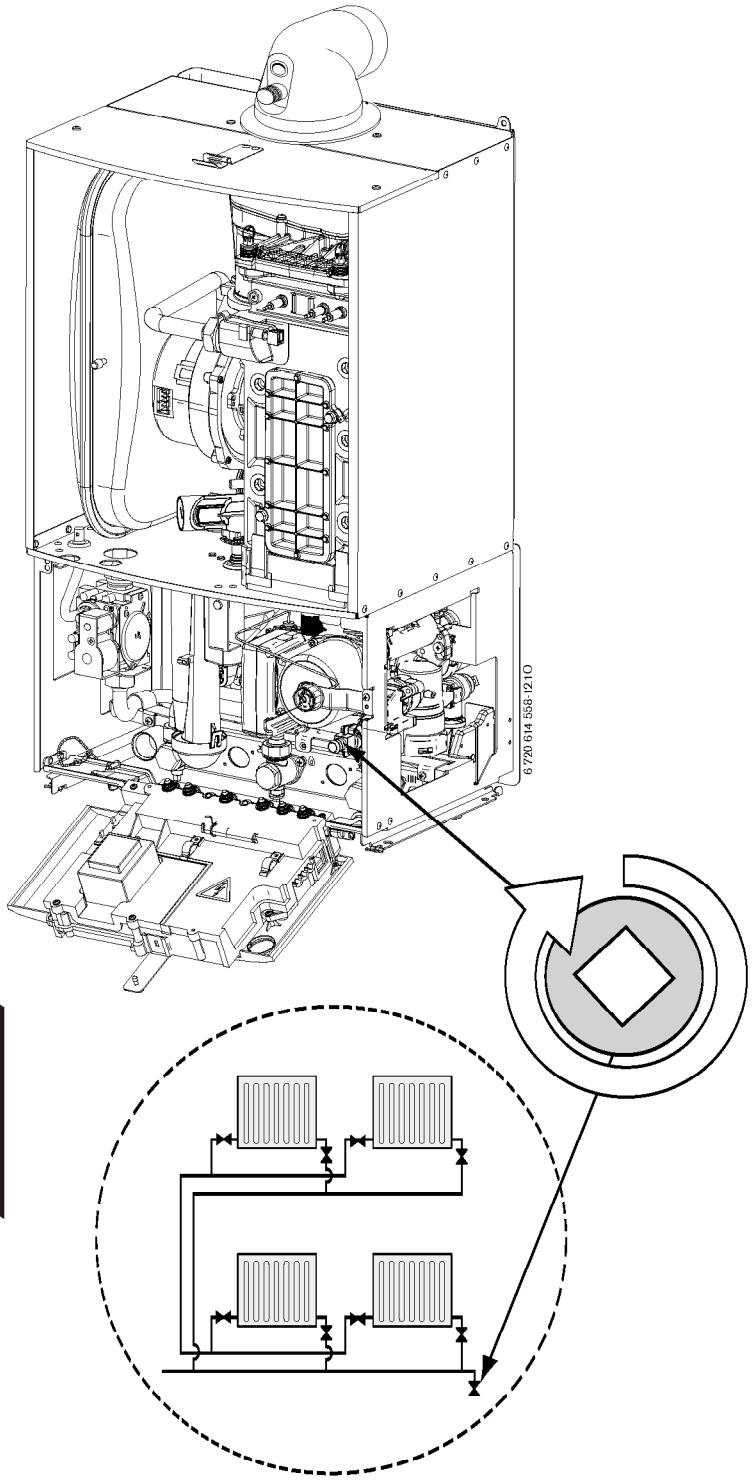

FILLING THE SYSTEM

1 Ensure all system and boiler drain points are closed.
2 For sealed systems fill the system using a WRAS approved filling loop to a pressure of 1 bar.
3 Vent all radiators, retighten when completed and check the system and correct any leaks.
- The boiler integral expansion vessel is precharged to 0.75 bar (equal to a static head of 7.5 meters [22 ft]). A Schraeder type valve is fitted to the expansion vessel to allow for pressure adjustment if required.
- *If an extra expansion vessel is fitted to the central heating return, adjust to the* ***same pressure*** *as the appliance internal expansion tank, refer to separate instructions with the extra expansion vessel.*

4 Briefly open the pressure relief valve to test its operation.
5 Refill the system up to 1 bar.

GAS SUPPLY

- ▶ Open gas cock on the boiler and purge the gas supply to the boiler ensuring that the room is well ventilated.
- ▶ Test gas supply for soundness as described in BS 6891.

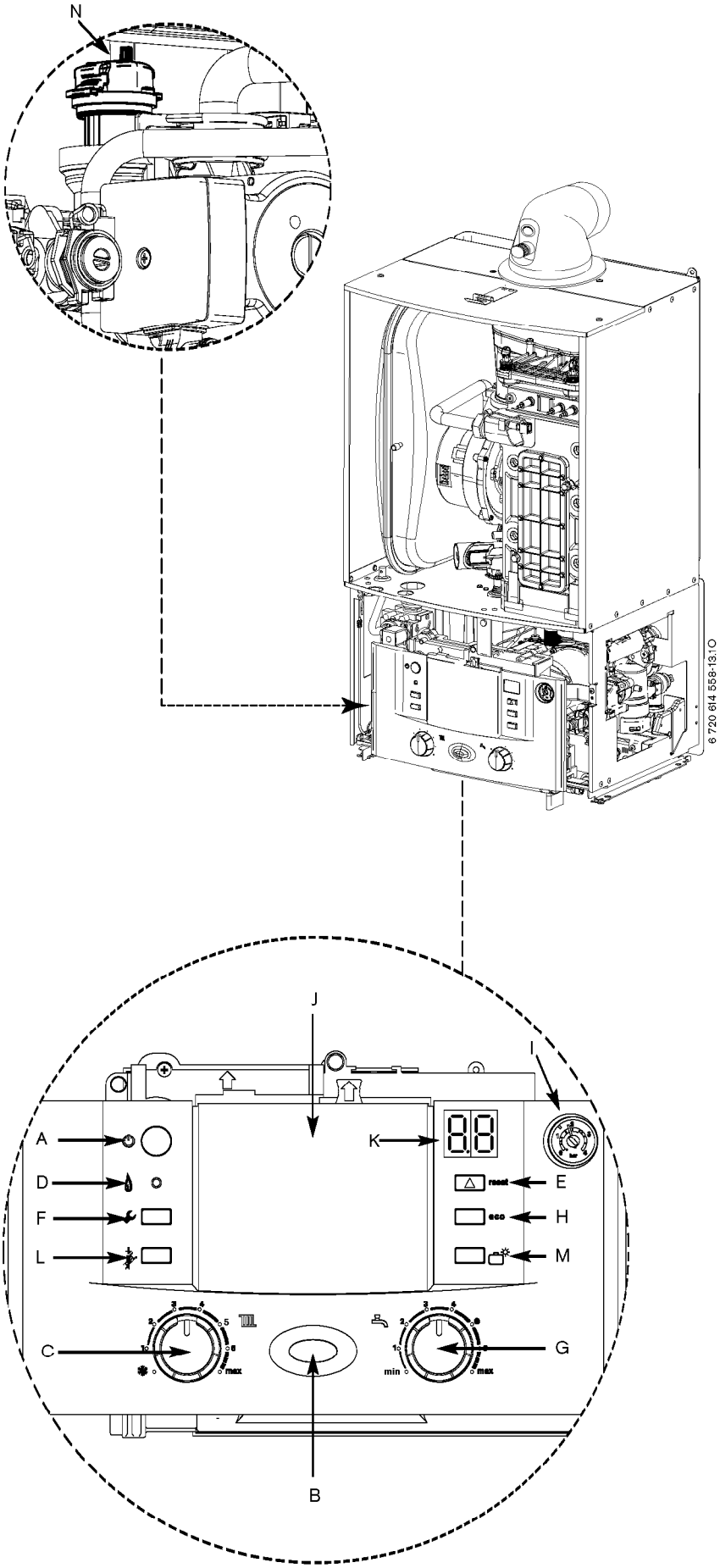

IMPORTANT: Never run the appliance when the appliance/system is empty or partially filled.

SWITCHING THE APPLIANCE ON/OFF:

1 ▶ Turn on mains power supply.
▶ Turn on any external controls.
Set the thermostatic radiator controls to maximum temperature.
Set the clock/programmer to continuously ON and the room thermostat to maximum temperature.

2 A - On/off button
B - On/off and fault indicator (BLUE)
C - Central heating temperature control
D - Burner indicator (GREEN)
E - Reset button
F - Service button
G - DHW temperature control (only in conjunction with optional diverter valve)
H - ECO button (only in conjunction with optional diverter valve)
I - System pressure gauge
J - Cover or optional programmer with intelligent functionality
K - Display
L - Central heating boost button
M - Holiday button (only in conjunction with optional diverter valve)
N - Automatic air vent

▶ Press button (A) and the power on indicator (B) illuminates BLUE. After a few seconds the display will show the flow temperature.

3 ▶ Turn the CH temperature control (C) to maximum. The burner on indicator (D) illuminates GREEN when the burner has lit.
NOTES:
• The first time the appliance is switched on, a once-only venting function is activated. The heating pump then switches on and off at intervals. This sequence lasts about 8 minutes. The display shows shows $_0^0$ in alternation with the CH flow temperature. The automatic air vent (N) must be open, please verify.
• The boiler runs for 15 minutes at minimum heating output to fill the condensate trap, the display (K) alternates between "-II-" and the central heating flow temperature. This occurs every time the mains supply has been interrupted.

4 ▶ If the boiler fails to light the BLUE power indicator (B) and reset button (E) will flash alternately.
To reset press and hold the reset button (E) for 2 seconds. The boiler will be reset.

CAUTION: DO NOT PRESS POWER INDICATOR (B) TO RESET BOILER.

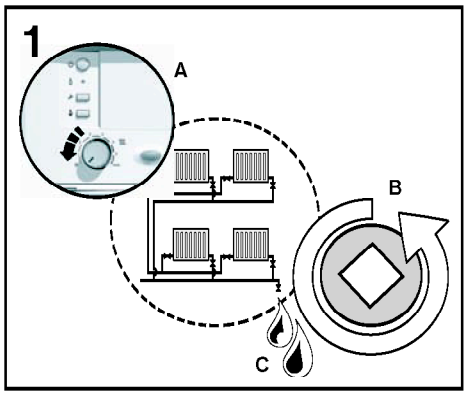

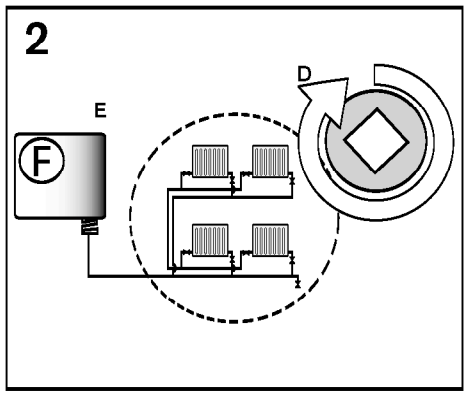

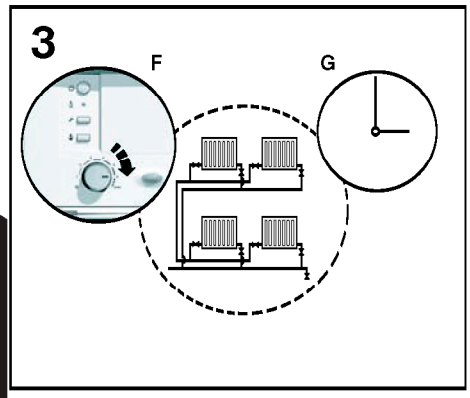

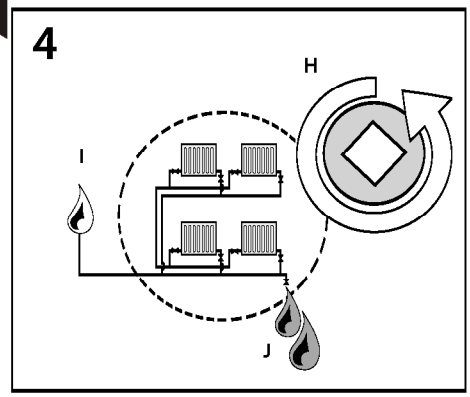

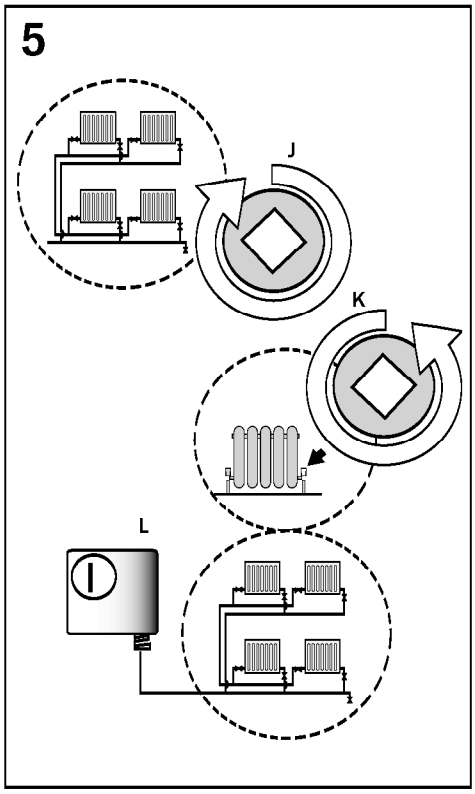

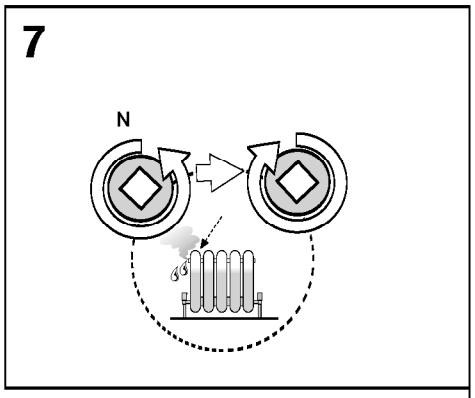

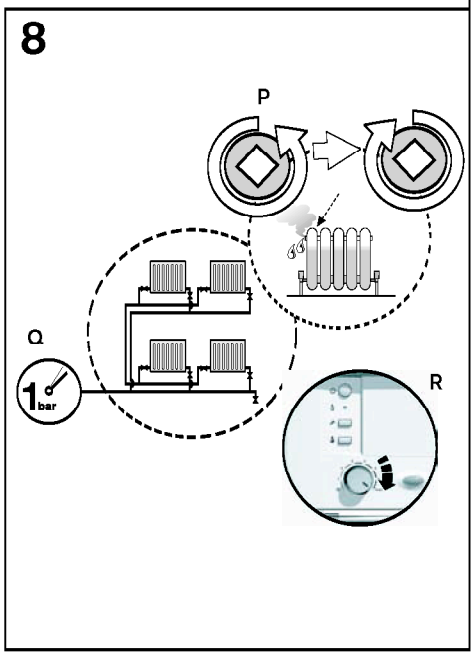

KEY

Valve

Flushing Agent

Inhibitor

6 720 612 032-06.1O

WATER TREATMENT

IMPORTANT: Debris from the system can damage the boiler and reduce efficiency. Failure to comply with the guidelines for the use of water treatment with the appliance will invalidate the appliance warranty.

ENSURE THAT THE SYSTEM HAS BEEN CLEANED AS ON PAGE 9 OF THESE INSTRUCTIONS.

FLUSHING (Central Heating):

1. ▸ Switch off the boiler (A).
   ▸ Open all drain cocks (B) and drain the system (C) while the appliance is hot.
2. ▸ Close drain cocks (D) and add a suitable flushing agent (E) at the correct strength for the system condition in accordance with the manufacturer's instructions.
3. ▸ Run the boiler/system at normal operating temperature (F) for the time stated by the manufacturer of the flushing agent (G).
4. ▸ Drain (H) and thoroughly flush the system to remove the flushing agent and debris (I).

INHIBITOR (Central Heating):

5. ▸ Check drain cocks are closed (J) and all radiator valves are open (K) before adding a suitable* inhibitor (or combined inhibitor/anti-freeze if the system is exposed to freezing conditions) to the heating system water (L) in accordance with the manufacturers instructions.
6 Fill via a WRAS approved filling loop to between 1 and 2 bar.
7. ▸ Vent all radiators; retighten vents when complete (N).
8. ▸ Re-pressurise if necessary to 1 bar (Q).
   ▸ Set all controls to maximum (R).
   ▸ Record the date when the inhibitor was added to the system on the guarantee card.

NOTE: The concentration level of inhibitor in the system should be checked every 12 months or sooner if system content is lost.

The addition of sealing agents to the system water is not recommended as this can cause problems with deposits left in the heat exchanger.

*** compatible with aluminium. The pH value of the system water must be less than 8 or the appliance guarantee will be invalidated.**

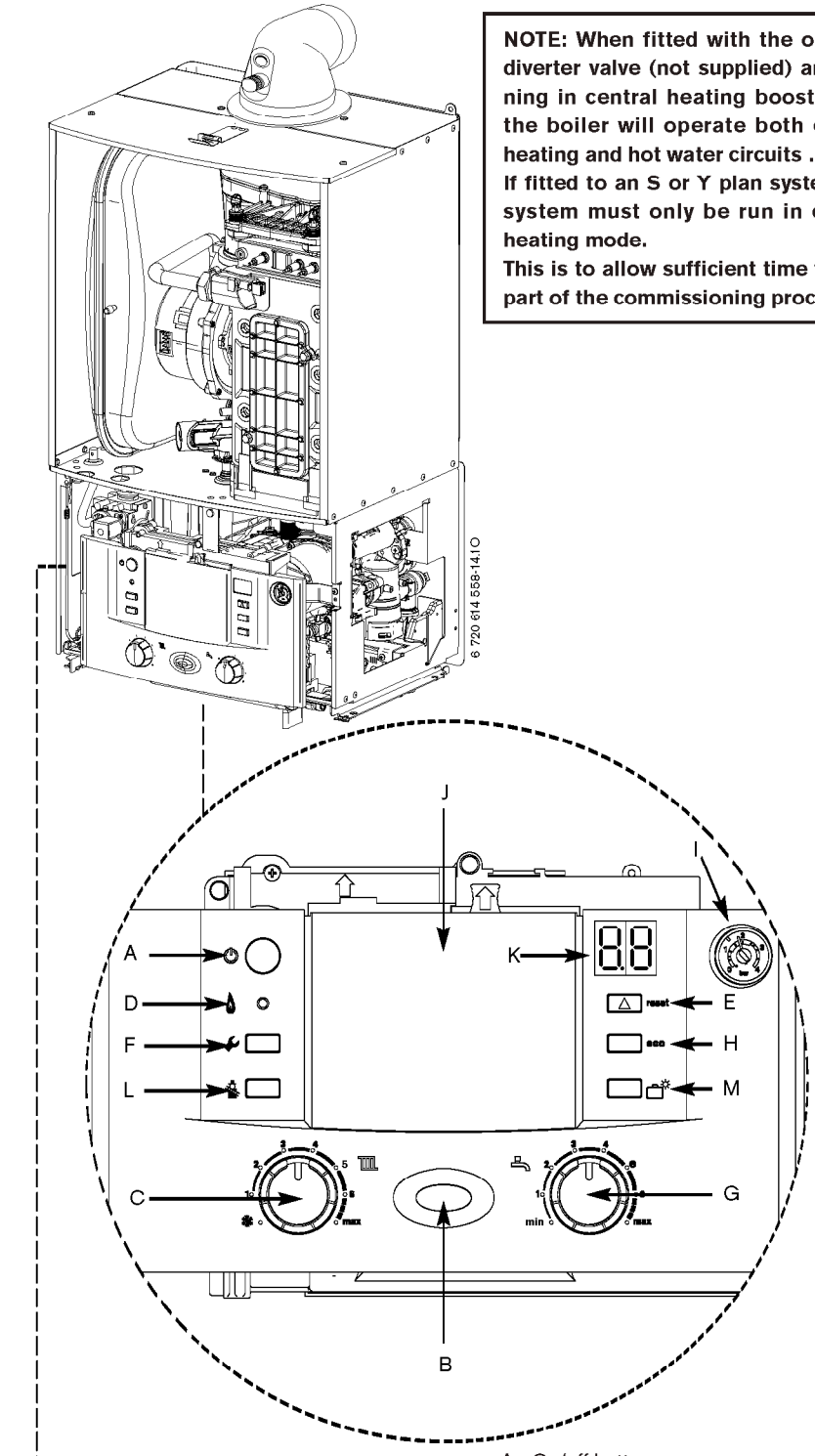

NOTE: When fitted with the optional diverter valve (not supplied) and running in central heating boost mode, the boiler will operate both central heating and hot water circuits .
If fitted to an S or Y plan system, the system must only be run in central heating mode.
This is to allow sufficient time for this part of the commissioning procedure.

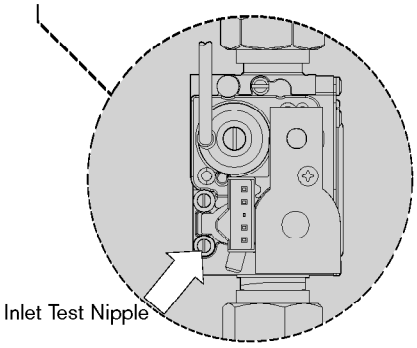

A - On/off button
B - On/off and fault indicator (BLUE)
C - Central heating temperature control
D - Burner indicator (GREEN)
E - Reset button
F - Service button
G - DHW temperature control (only in conjunction with optional diverter valve)
H - ECO button (only in conjunction with optional diverter valve)
I - System pressure gauge
J - Cover or optional programmer
K - Display
L - Central heating boost button
M - Holiday button (only in conjunction with optional diverter valve)

COMMISSIONING

THE COMBUSTION FOR THE APPLIANCE IS FACTORY SET.
NO ADJUSTMENT IS REQUIRED IF THE GAS INLET PRESSURE IS CORRECT.

CHECKING GAS INLET PRESSURE:
The inlet pressure to the appliance must be checked using the following procedure:

SETTING THE BOILER TO MAXIMUM:

1 ▶ Press central heating boost button (L) for ten seconds and set Central Heating temperature to maximum.
• The central heating boost button will illuminate continually.

MEASURING THE INLET PRESSURE:

2 ▶ Slacken the screw in the inlet pressure test point and connect a manometer.
▶ Measure the pressure with the boiler running at maximum.
▶ Check the gas supply working pressure at the gas valve inlet point:
N.G. minimum 18 mbar
L.P.G. 37 mbar
▶ The gas rate should be measured at the gas meter after 10 minutes operation at maximum. See technical data section at the front of this manual.
▶ Ensure inlet pressure is satisfactory with all other gas appliances working.
▶ Replace controls cover. NOTE: This boiler is designed with a differential of 20°C across the heating system.

IMPORTANT: Do not continue commissioning until the correct gas inlet pressure is achieved.

▶ If pressure is satisfactory press the central heating boost button (L) again and the boiler will return to normal operation.
• If left in the central heating boost mode the control will return to normal operation after 15 minutes.
▶ Re-seal the screw in the gas inlet pressure test point.

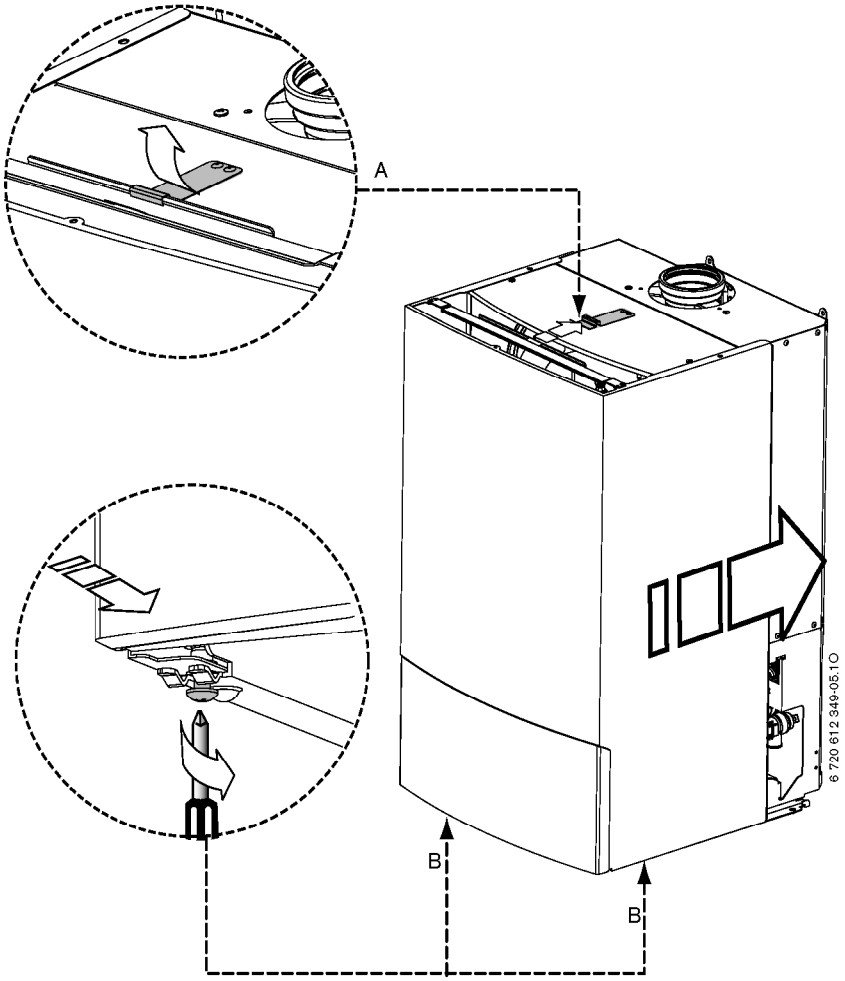

FINISHING COMMISSIONING

The boiler has been factory set, so there should be no need to adjust combustion settings.

REPLACE OUTER CASING:

1 Replace outer casing making sure that the securing points are properly located.
   ▸ Press the clip (A) downwards to secure casing on top.
   ▸ Retighten bottom two screws (B).

INSTALLING BOTTOM PANEL:

2 The bottom panel slides onto two ledges (C) either side of the boiler frame.
   ▸ Hold the panel up against the underside of the boiler and slide towards the rear until it is fully engaged.

HANDOVER:

- ▸ Complete the British Gas Commissioning Checklist.
- ▸ Open the facia cover by gently pressing the centre top of the cover (D).
- ▸ Set up the controls and show the user how to operate all the controls shown in the User Guide.
- ▸ Place the user guide into the tray (E) on the inside of the facia cover.
- ▸ If the appliance is unused and exposed to freezing conditions; shut off all the mains supplies and drain the system and boiler.

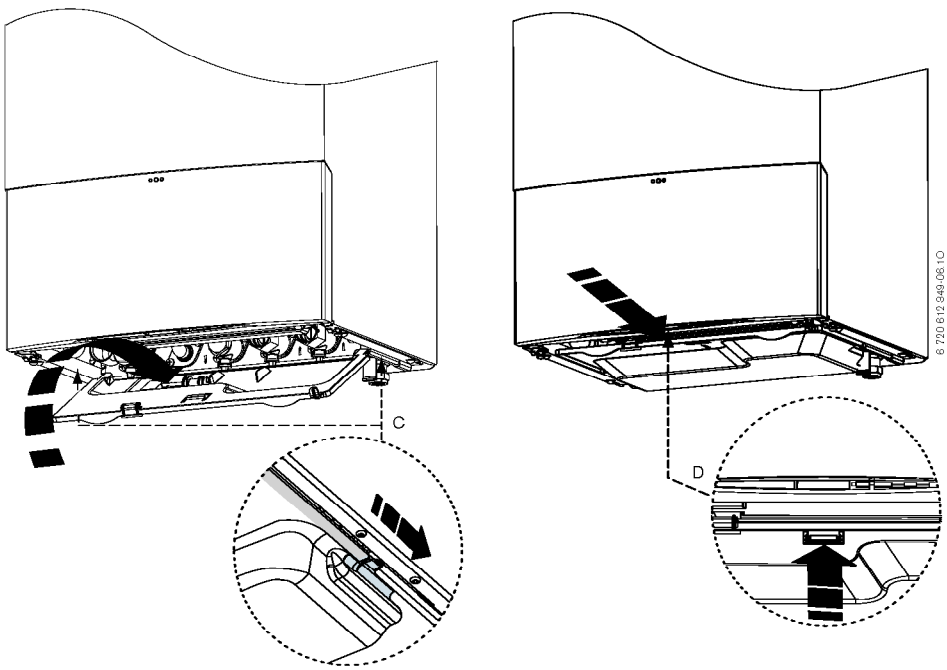

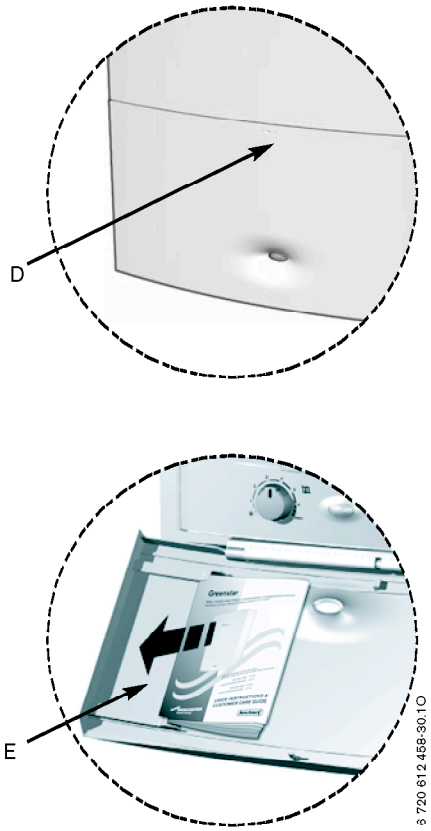

CAUTION: TURN OFF THE GAS SUPPLY AND ISOLATE THE MAINS SUPPLIES BEFORE STARTING ANY WORK AND OBSERVE ALL RELEVANT SAFETY PRECAUTIONS.

IMPORTANT: AFTER REPLACEMENT OF ANY COMPONENTS ALWAYS CHECK FOR GAS SOUNDNESS WHERE RELEVANT AND CARRY OUT FUNCTIONAL CHECKS AS DESCRIBED IN COMMISSIONING.
ANY O-RING OR GASKET THAT APPEARS DAMAGED MUST BE REPLACED.

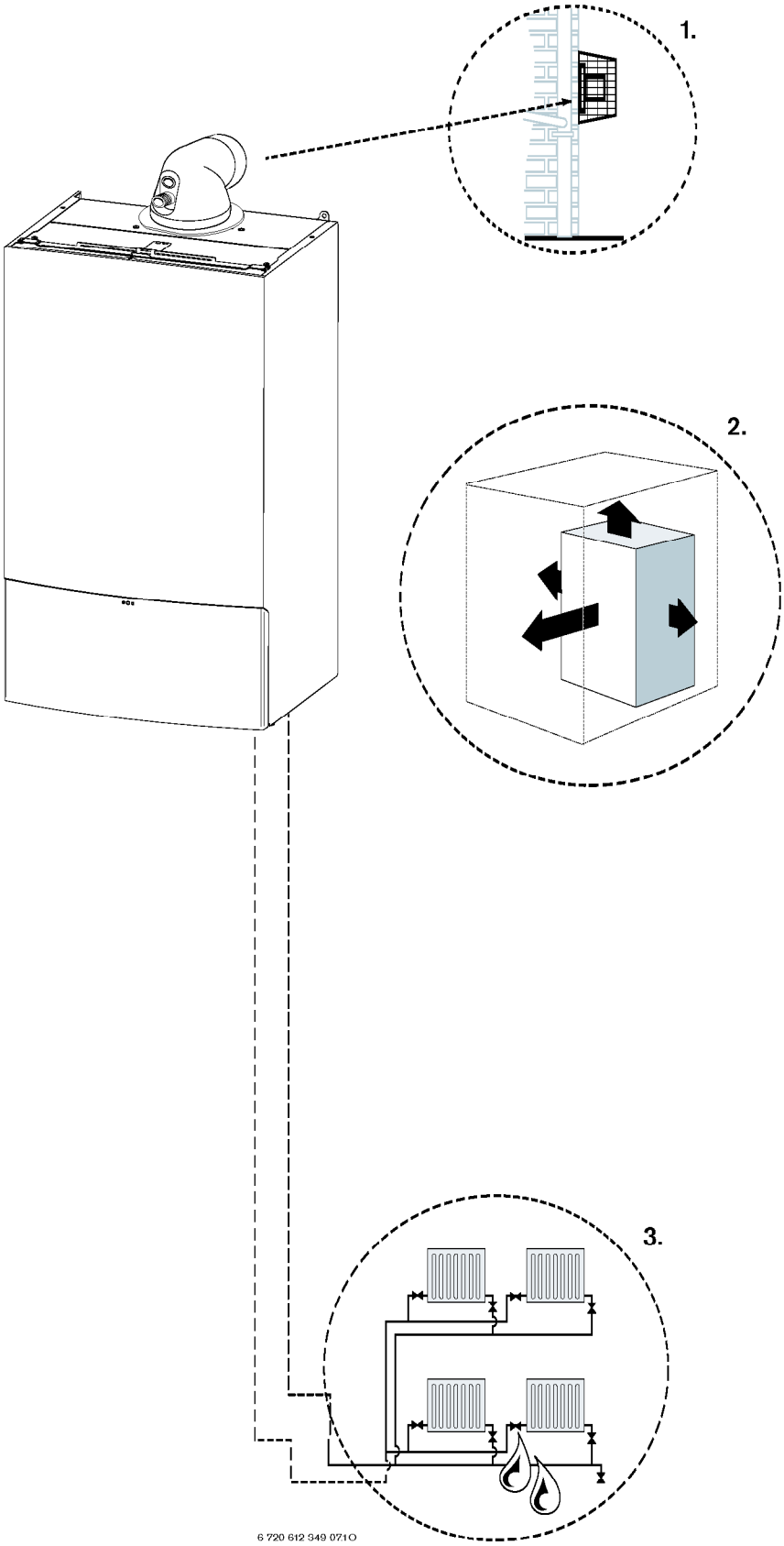

INSPECTION AND SERVICE

IMPORTANT: Any service work must be carried out by competent registered engineers such as British Gas or Corgi registered engineer.

- To ensure the continued efficient operation of the appliance it must be checked at regular intervals.
- The frequency of servicing will depend upon the particular installation conditions and usage. However, an annual service is recommended.
- The extent of the service required by the appliance is determined by the operating condition of the appliance when tested by **fully qualified engineers**.

INSPECTION

1. Check that the terminal and the terminal guard, if fitted, are clear and undamaged.
2. If the appliance is in a compartment or cupboard check that the specified service space around the appliance is clear.
3. Check all the joints and connections in the system and remake any that show signs of leakage. Refill and re-pressurise if applicable as described in Commissioning.
   ▸ Operate the appliance and take note of any irregularities. Call up the last fault stored by the Bosch Heatronic, Service Function **.0**. Refer to Fault Finding for rectification procedures.
4. Please consult Operational Procedures Part 11, Servicing Policy.

COMPONENT ACCESS

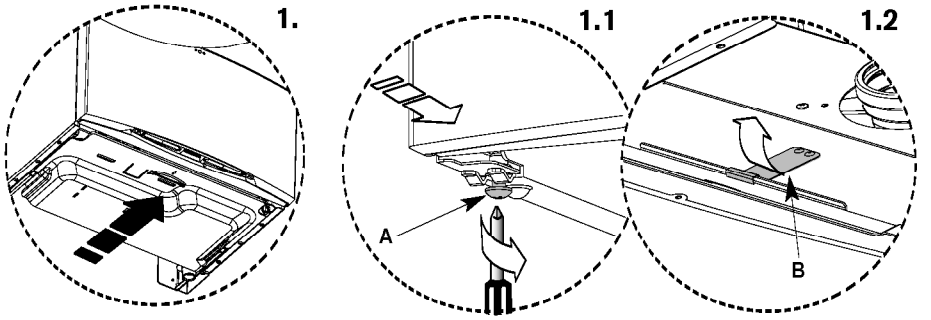

1. Removing outer case

1. Remove bottom panel by pulling it forward and off.
1.1 Undo but do not remove the 2 screws (A) securing boiler casing at the bottom of the appliance.
1.2 Pull upwards to release the clip (B) on top of the boiler.
1.3 Pull case forward and remove.

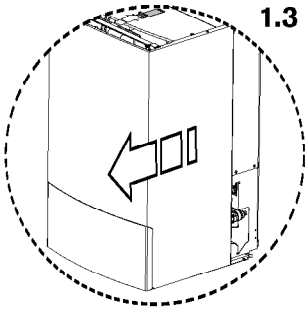

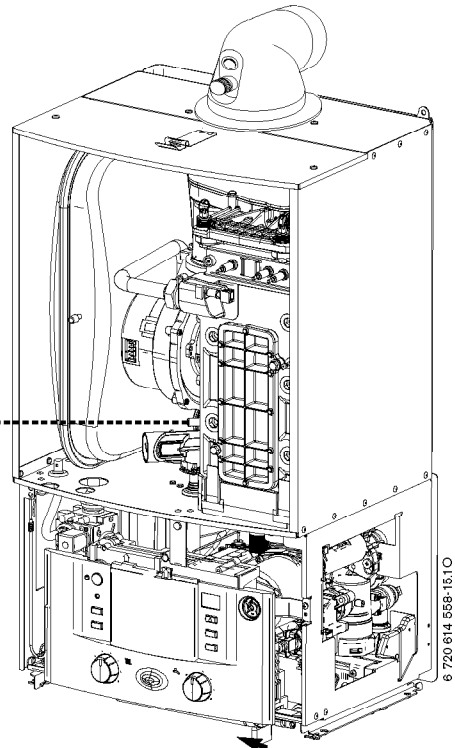

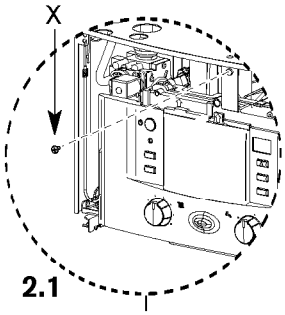

2. Adjusting boiler control to service position

2.1 Remove screw (X) securing control.
2.2 Gently pull forward until it comes to rest in service position.

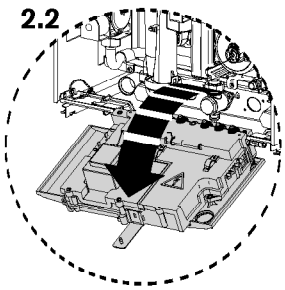

SERVICING & SPARES

Primary Heat Exchanger

There is a special accessory kit available specifically designed for cleaning the heat exchanger. If required order 7 719 001 996.

3. ▸ Check fan pressure at the test point next to the fan using an electronic manometer
▸ The boiler must be run at maximum output. Pressure will read negative and be greater than:

3.9 mbar

▸ Pressures measured below these figures will indicate that the heat exchanger will require cleaning.

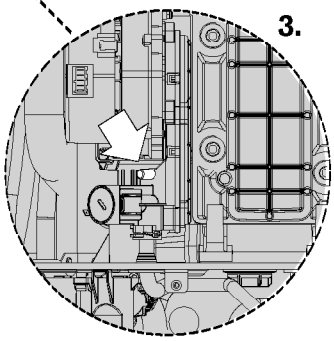

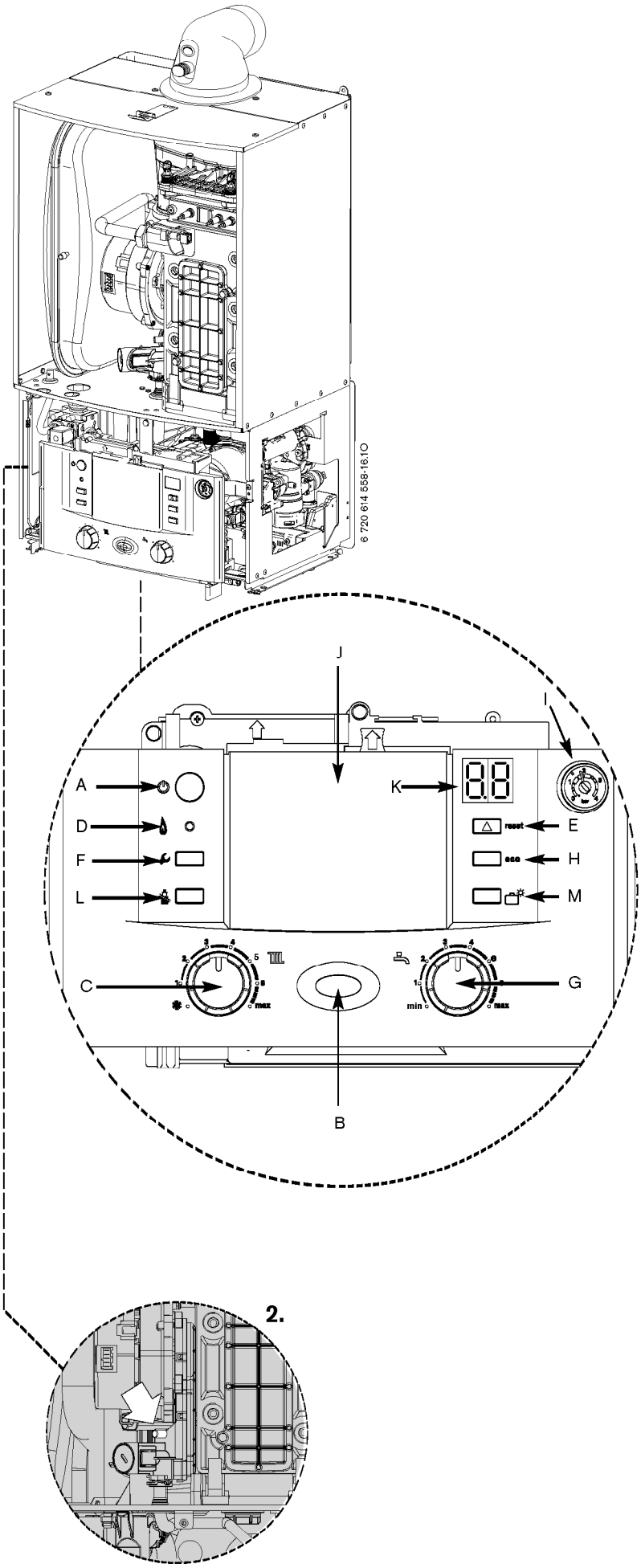

Setting Boiler to Maximum.

NOTE: When fitted with the optional diverter valve (not supplied) and running in central heating boost mode, the boiler will operate both central heating and hot water circuits.
If fitted to an S or Y plan system, the system must only be run in central heating mode.

A - On/off button
B - On/off and fault indicator (BLUE)
C - Central heating temperature control
D - Burner indicator (GREEN)
E - Reset button
F - Service button
G - DHW temperature control (only in conjunction with optional diverter valve)
H - ECO button (only in conjunction with optional diverter valve)
I - System pressure gauge
J - Cover or optional text display with intelligent functionality
K - Display
L - Central heating boost button
M - Holiday button (only in conjunction with optional diverter valve)

1 ▶ Press and HOLD central heating boost button (L) for 10 seconds and set Central Heating temperature to maximum.
• The central heating boost button will illuminate continually.
• The boiler will stay in this mode for 15 minutes unless the central heating boost button is pressed again.

2 ▶ Pull the cover off and connect a manometer to the fan pressure test point.
▶ After measurement replace test point cover.

Pressure will read negative and be greater than:
3.9 mbar

• Pressures measured below these figures will indicate that the heat exchanger will require cleaning.
• There is a special accessory kit available specifically designed for cleaning the heat exchanger. If required order 7 719 001 996.

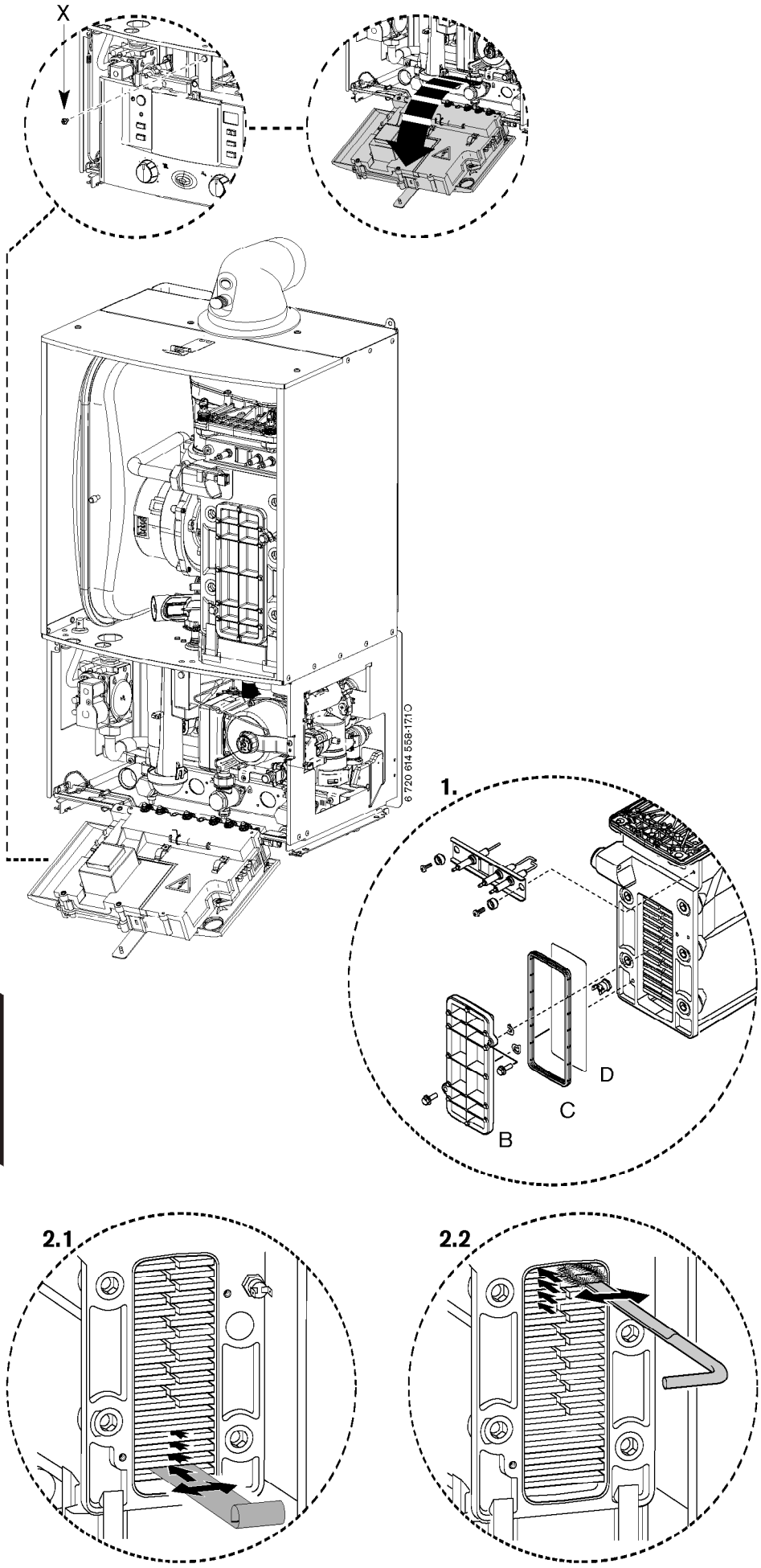

COMBUSTION TESTING MUST BE CARRIED OUT BY A COMPETENT PERSON. IT MUST **NOT** BE ATTEMPTED UNLESS THE PERSON CARRYING OUT THE COMBUSTION CHECK IS EQUIPPED WITH A COMBUSTION ANALYSER CONFORMING TO BS 7927 AND IS COMPETENT IN IT'S USE.

To Clean the Heat Exchanger

▸ Remove outer case and base panel and isolate the appliance from power.

1. ▸ Remove cleaning access cover (B), seal (C) and metal plate (D) securing it, if present.

2.1 ▸ Loosen any deposits in the heat exchanger from top to bottom using the cleaning blade.

2.2 ▸ Clean the heat exchanger from top to bottom using the brush.

▸ Refit the clean out coverplates in reverse order using a new seal (C) and tighten screws.

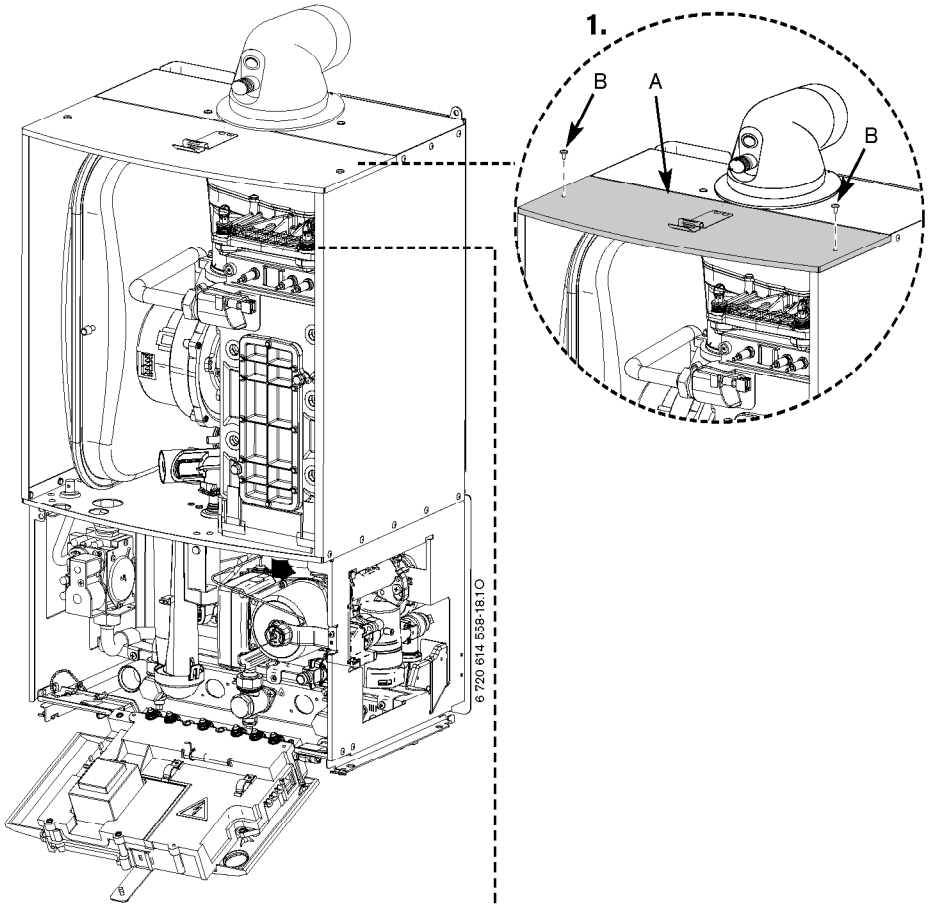

To Clean the Burner

1. ▶ Remove cover panel (A) by removing the screws (B).
   ▶ Check that the boiler is completely isolated from the gas supply.
2. ▶ Remove the clips (C) and unscrew the two bolts (D).
   ▶ Unscrew and remove the two hexagon screws (E) securing the fan.
   ▶ Slacken fully the rear securing bolt (F).
   ▶ Remove the burner cover plate (G).
3. ▶ Remove the burner (H) and clean components. **Do not use a wire brush.**

To Check the Diaphragm in Burner Cover

4. ▶ Carefully withdraw diaphragm (J) from fan intake tube and check for soiling and splits.
   ▶ Carefully refit diaphragm (J) the correct way round into the fan intake tube.
   Note: The flaps of the diaphragm (J) must open upwards.
   ▶ Re-assemble burner in reverse order using a new seal (K).
   ▶ Adjust gas/air ratio. Refer to section "Setting the gas/air ratio".

To Clean the Condensate Trap

5.1 ▶ Pull condensate pipe out of the adapter.
5.2 ▶ Remove trap from boiler.
   ▶ Clean trap and check that the connection to the heat exchanger is clear.
   ▶ Fill the condensate trap with approximately 1/4 litre of water and refit in reverse order.

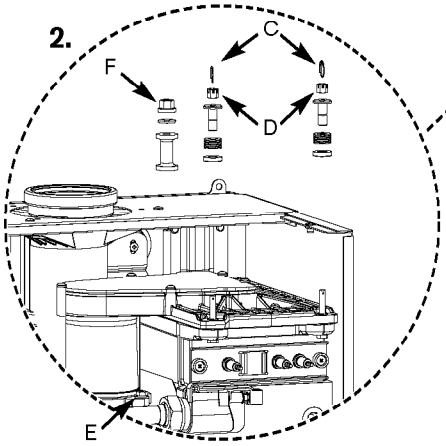

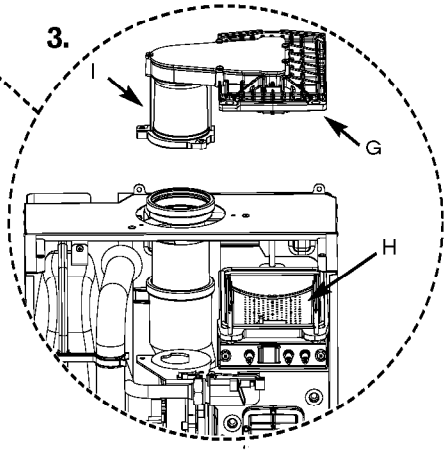

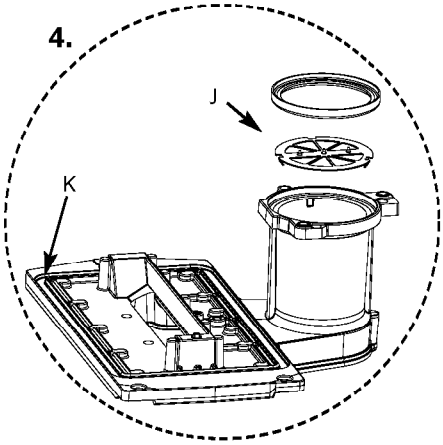

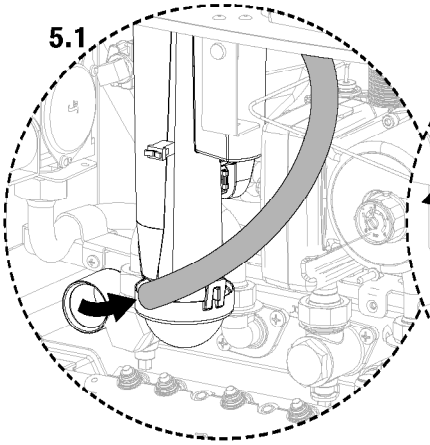

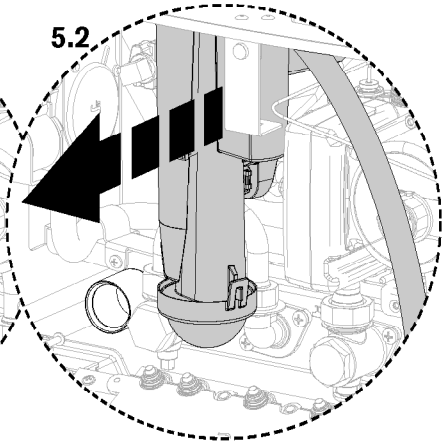

SERVICING & SPARES

CAUTION: TURN OFF THE GAS SUPPLY AND ISOLATE THE MAINS SUPPLIES BEFORE STARTING ANY WORK AND OBSERVE ALL RELEVANT SAFETY PRECAUTIONS.

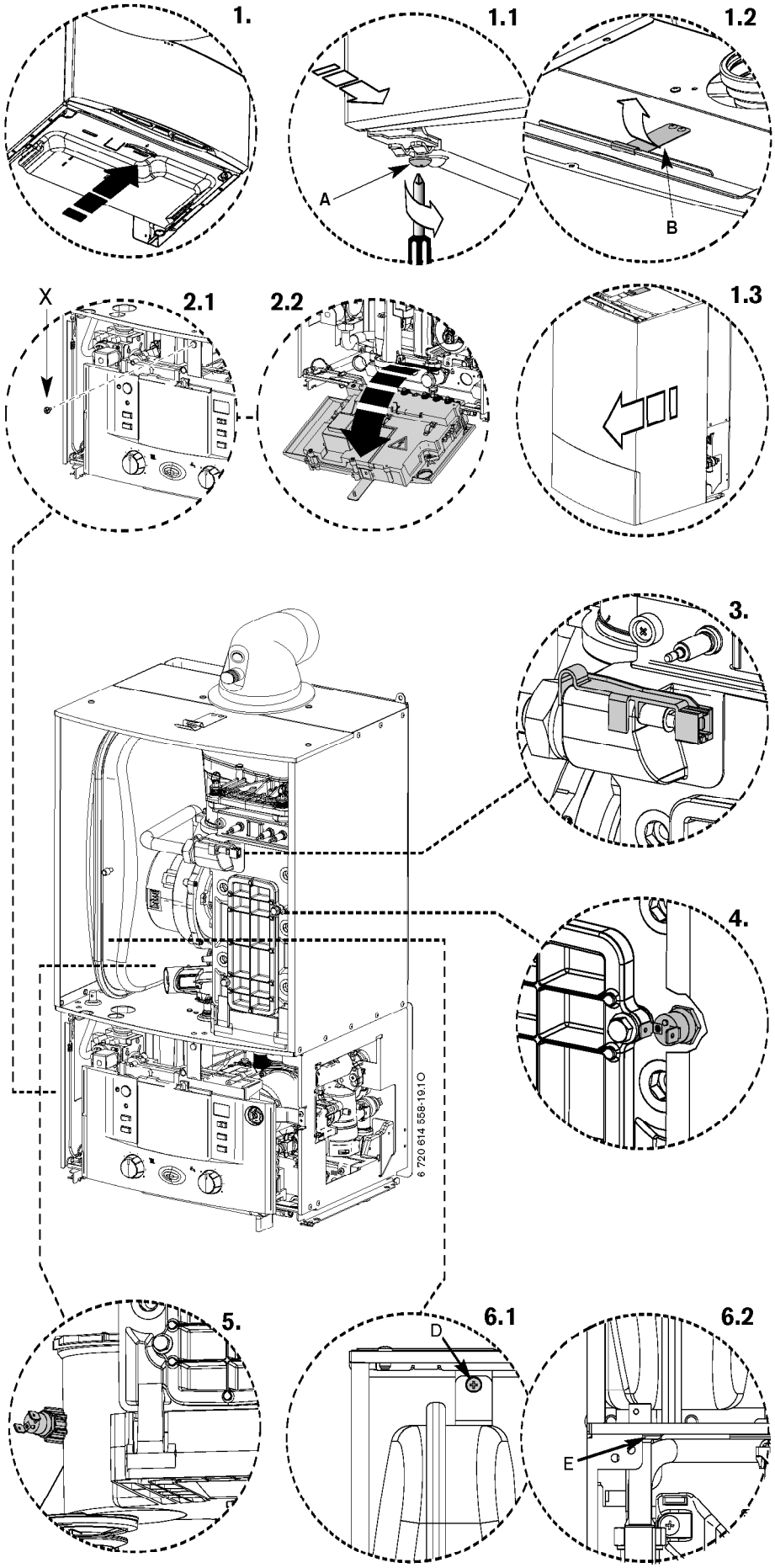

IMPORTANT: AFTER REPLACEMENT OF ANY COMPONENTS ALWAYS CHECK FOR GAS SOUNDNESS WHERE RELEVANT AND CARRY OUT FUNCTIONAL CHECKS AS DESCRIBED IN COMMISSIONING. ANY O-RING OR GASKET THAT APPEARS DAMAGED MUST BE REPLACED.

1. Removing outer case

1. ▶ Remove bottom panel by pulling it forward and off.

1.1 ▶ Loosen but do not remove the 2 screws (A) securing boiler casing at the bottom of the appliance.

1.2 ▶ Pull upwards to release the clip (B) on top of the boiler.

1.3 ▶ Pull case forward and remove.

2. Moving boiler control to service position

2.1 ▶ Remove screw (X)securing control.

2.2 ▶ Gently pull forward.

3. Primary sensor

▶ Press retaining clip on plastic moulding and pull upwards until clear of pocket in heat exchanger.

▶ Separate sensor from connector, coat new sensor with heat conductive paste and replace.

4. Overheat thermostat

▶ Remove two electrical connectors from thermostat.

▶ Unscrew the sensor.

5. Flue limit thermostat

▶ Remove electrical connections.

▶ Unscrew thermostat from flue.

6. Expansion Vessel

▶ Drain the appliance.

6.1 ▶ Remove locking screw (D).

6.2 ▶ Undo the union connection (E) at the bottom of the expansion vessel.

▶ Remove expansion vessel from boiler.

▶ Set the pressure of the new vessel to that required by the system.

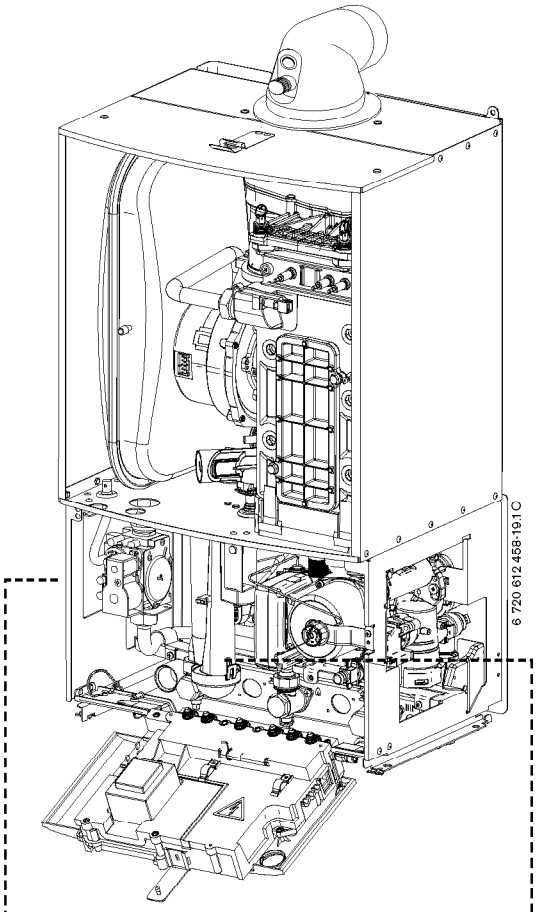

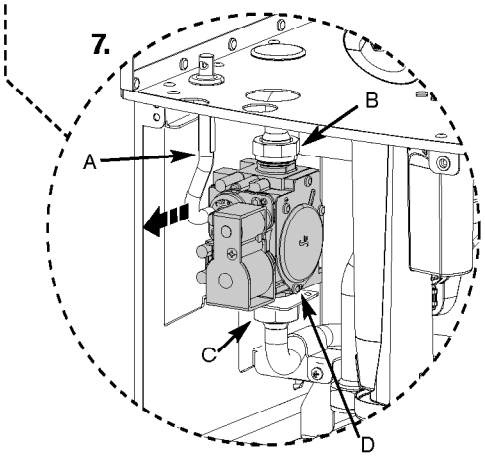

7. Gas valve

- ▸ Isolate gas supply at boiler gas cock.
- ▸ Pull out air inlet tube (A).

7.1 ▸ Undo top gas connection (B) to gas valve.

7.1 ▸ Undo bottom gas connection (C) to gas valve.

7.2 ▸ Undo two securing screws (D) on the underside of casing.

- ▸ Pull valve up and forward out of boiler.
- ▸ Disconnect electrical connections.
- ▸ Replace valve with new seals and check for gas soundness.

Note: *The valve will require setting, follow procedure "Setting the gas/air ratio" in the gas conversion section.*

8. Siphon

8.1 ▸ Pull condensate pipe out of the adapter.

8.2 ▸ Remove trap from boiler.

- ▸ Clean trap and check that the connection to the heat exchanger is clear.
- ▸ Fill the condensate trap with approximately 1/4 litre of water and refit in reverse order.

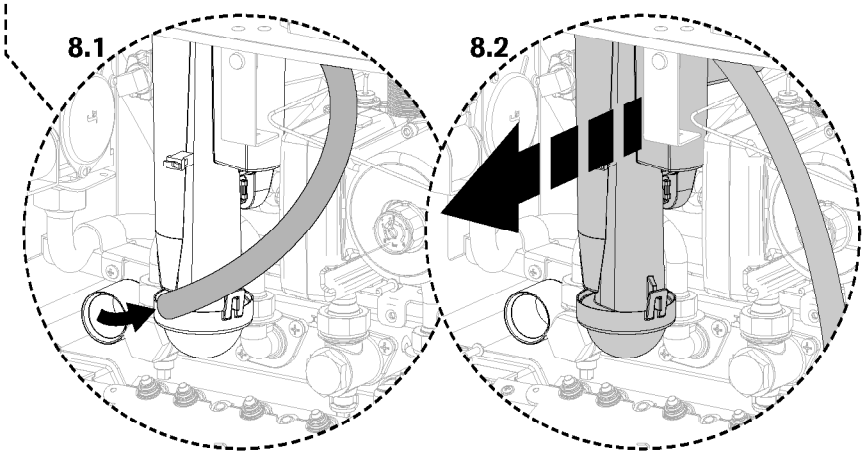

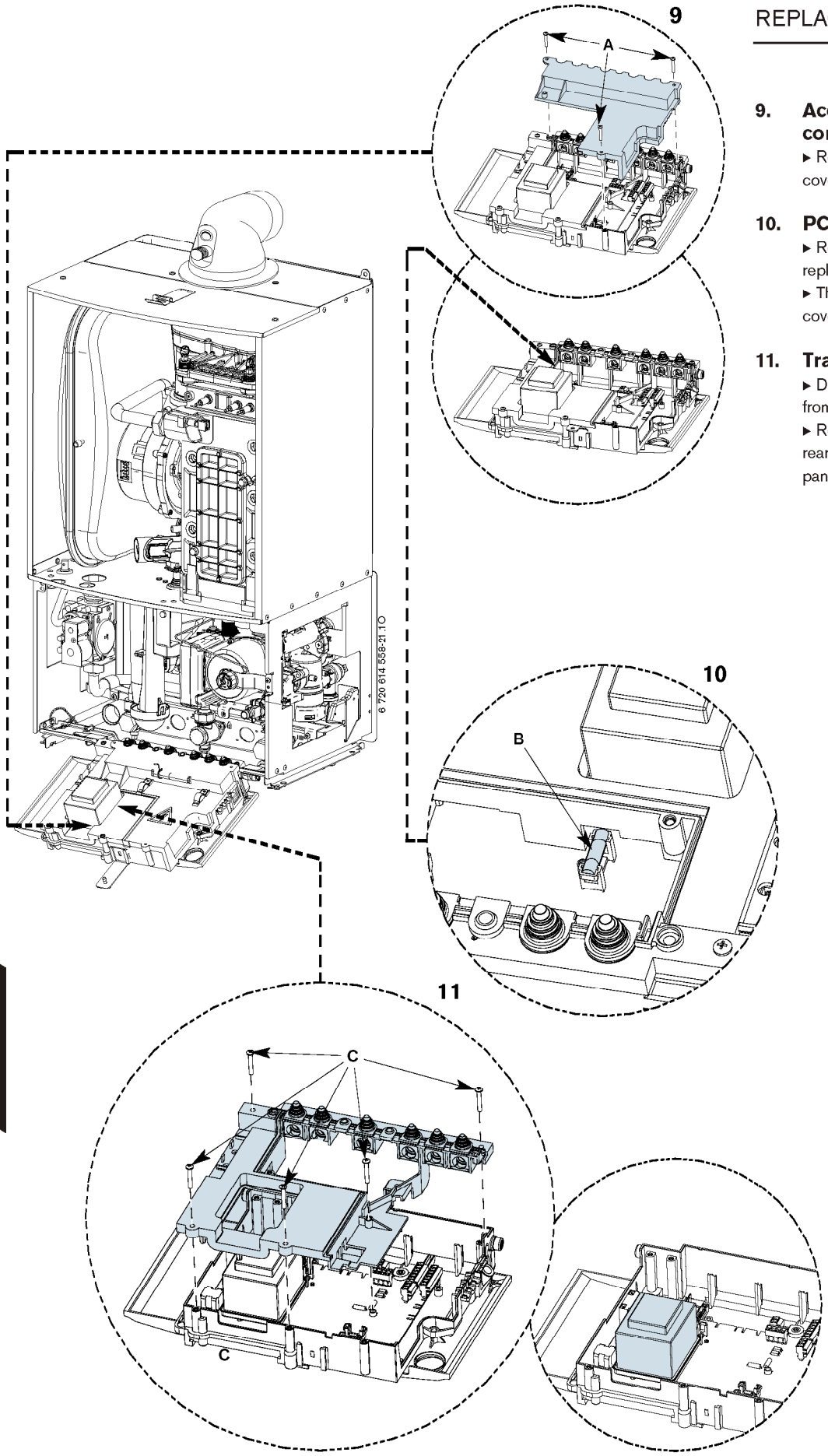

9. Access to boiler control components

▸ Remove 3 screws (A) and remove cover from control.

10. PCB fuse

▸ Remove fuse (B) from the PCB and replace.

▸ There is a spare fuse clipped into the cover.

11. Transformer / PCB

▸ Disconnect all electrical connections from the control.

▸ Remove 5 screws (C) retaining the rear panel of the control and remove panel.

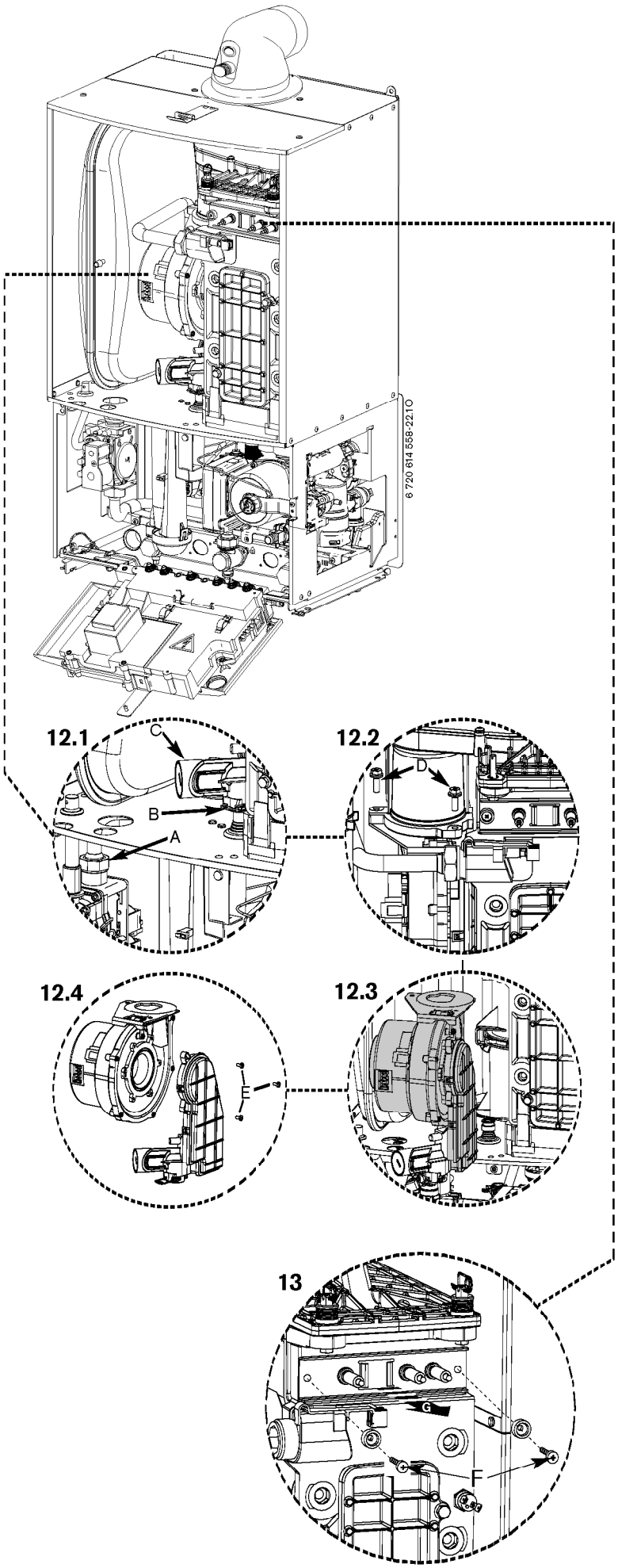

IMPORTANT: AFTER REASSEMBLY THE COMBUSTION MUST BE CHECKED USING THE PROCEDURE IN THE SECTION "SETTING THE GAS AIR RATIO". MEASUREMENT AND SETTING (IF NECESSARY) OF THE GAS RATIO MUST NOT BE ATTEMPTED UNLESS THE PERSON IS EQUIPPED WITH A COMBUSTION ANALYSER CONFORMING TO BS 7927 AND IS COMPETENT IN ITS USE.

12. Fan assembly

▶ Remove electrical connector from fan.

▶ Remove condensate trap (see page 39).

12.1 ▶ Undo the union connection (A).

▶ Remove wire clip (B) from air/gas adjustment assembly (C) then pull gas pipe down.

12.2 ▶ Unscrew two screws (D).

12.3 ▶ Remove fan from boiler.

12.4 ▶ Remove three screws retaining the air/gas adjustment assembly (E).

▶ Reassemble with new fan assuring that seals are correctly fitted.

13. Electrode assembly

▶ Disconnect spark electrodes and flame sensor connection.

▶ Remove two screws (F).

▶ Remove spark/flame electrode assembly (G) from heat exchanger.

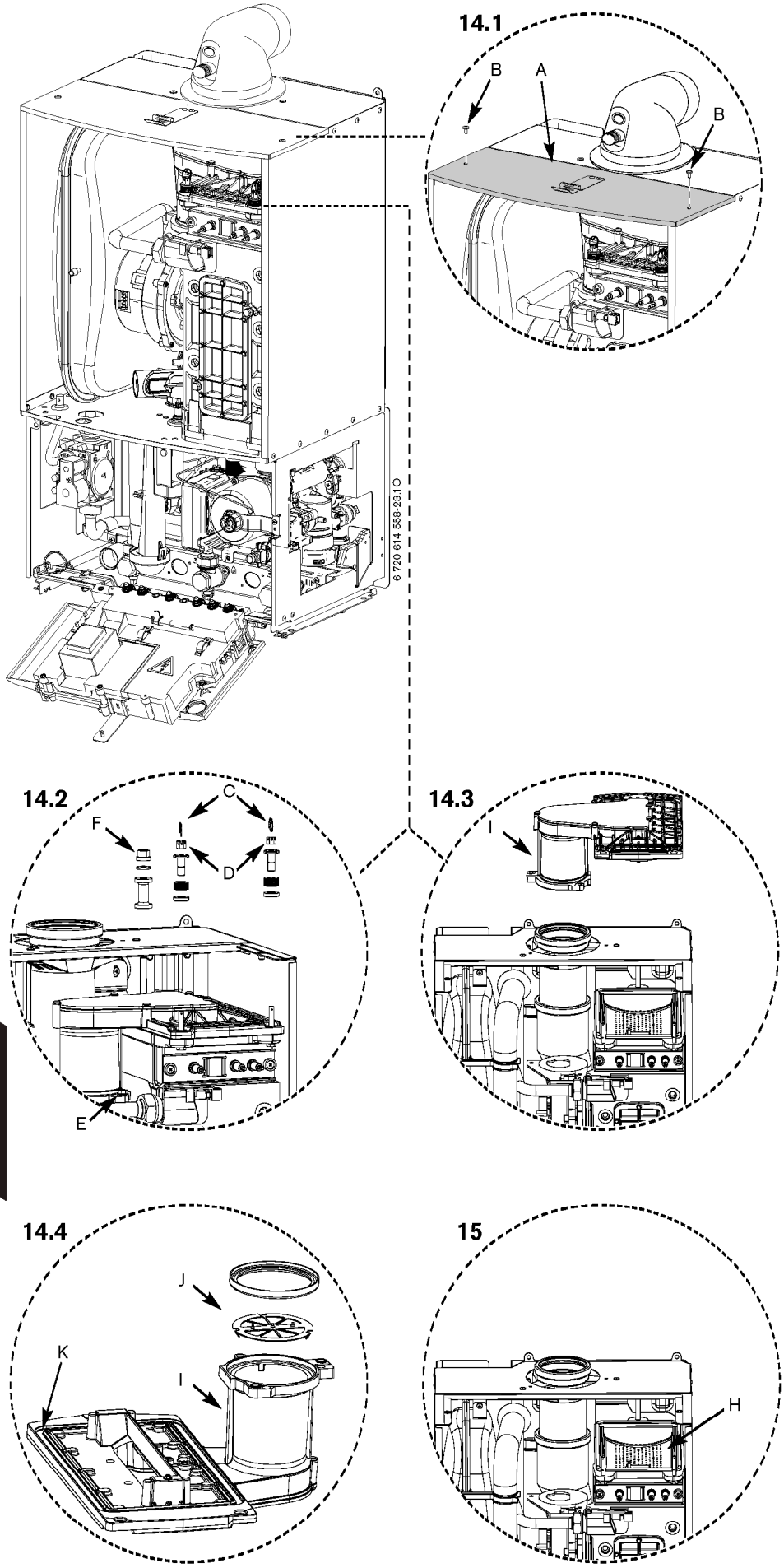

14. Air/gas manifold

14.1 ▸ Remove cover panel (A) by removing the screws (B).
▸ Check that the boiler is completely isolated from the gas supply.

14.2 ▸ Remove the clips (C) and unscrew the two bolts (D).
▸ Unscrew and remove the two hexagon screws (E) securing the fan.
▸ Slacken fully the rear securing bolt (F).

14.3 ▸ Remove air/gas manifold (I)

14.4 ▸ Open air/gas manifold (I).
▸ Carefully withdraw diaphragm (J) from fan intake tube and check for soiling and splits.

15. Burner

▸ Remove the burner (H).
▸ Replace new burner in correct position.
▸ Ensure that a new seal (K) is used.

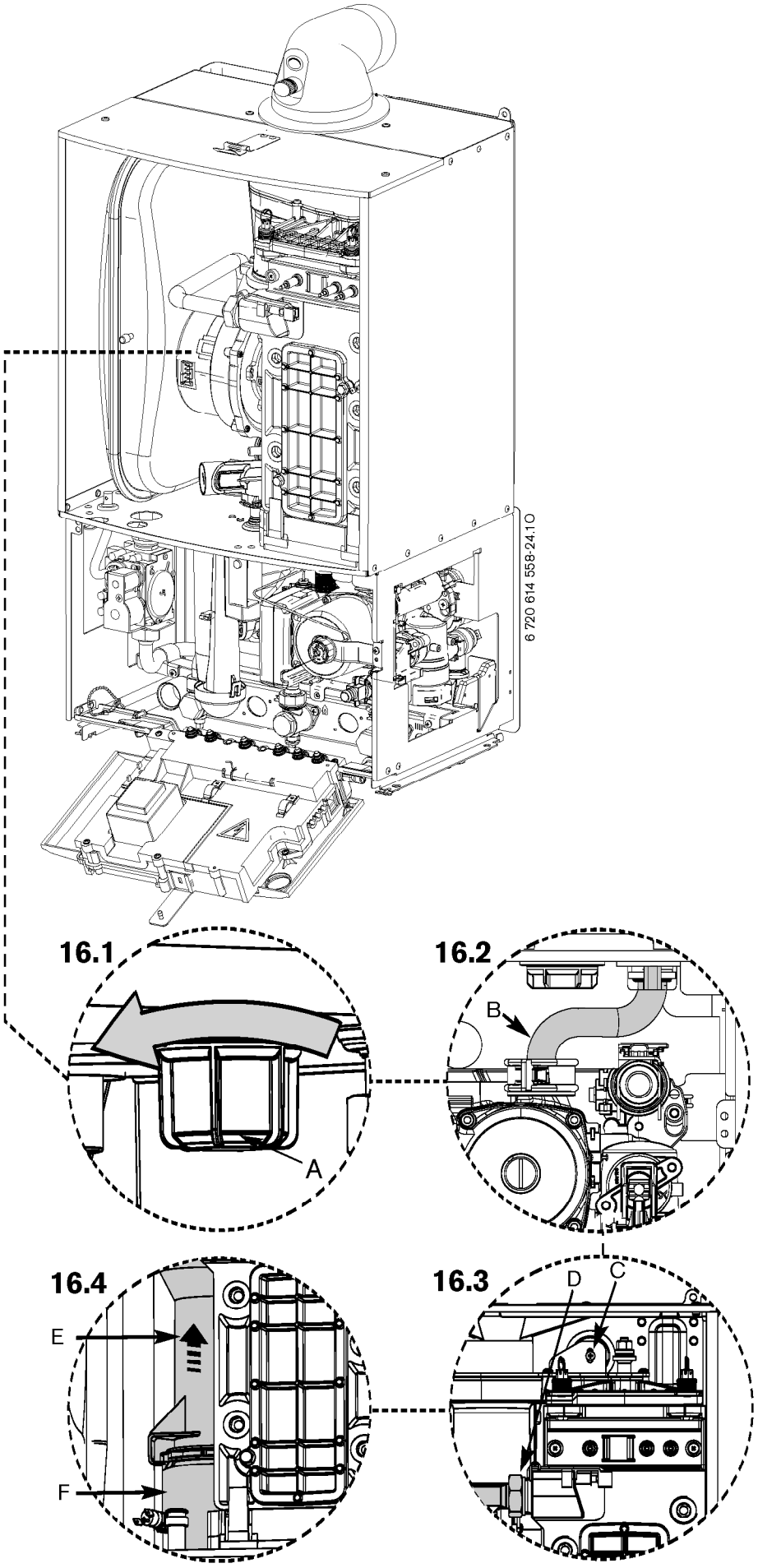

16. Heat exchanger

▶ Isolate flow and return valves and drain the boiler.

▶ Remove condensate trap (see page 39).

▶ Remove fan assembly (see page 43).

16.1 ▶ Remove plastic nut (A) from the base of the inner casing.

16.2 ▶ Remove return pipe (B) at the bottom of heat exchanger.

16.3 ▶ Remove screw at the top of the heat exchanger (C).

▶ Unscrew the flow pipe (D).

16.4 ▶ Undo flue connection (E) from sump (F).

▶ Pull flue pipe up.

▶ Remove the heat exchanger.

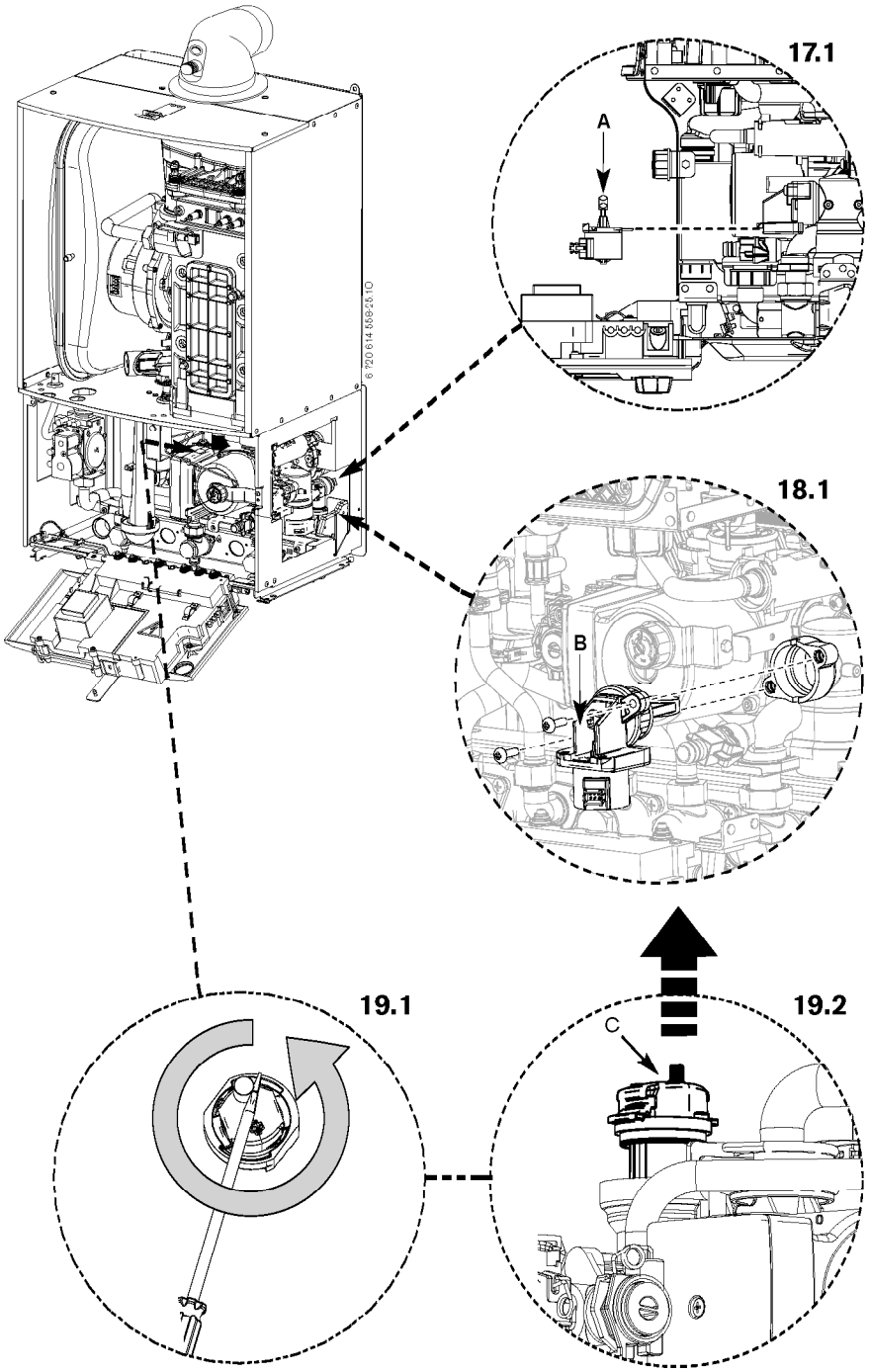

17. Diverter valve motor (if fitted)

There is no need to drain the appliance.

▸ Disconnect the electrical connector from the diverter valve motor.

17.1 ▸ Pull the motor assembly (A) towards you. The assembly will slide free from the valve.

▸ To refit, follow the above in reverse.

Note: *In case of problems when refitting the motor: Connect the electrical connector to the motor and switch the appliance on. Then the motor goes to the middle position and you can refit it without difficulty.*

18. Diverter valve

▸ Ensure the appliance has been fully drained.

▸ Disconnect the electrical connector from the diverter valve motor.

▸ Undo the two screws holding the valve to the plastic housing.

18.1 ▸ Withdraw the valve (B) and clean the valve chamber if necessary.

▸ To refit, follow the above in reverse. Ensure any seals that have been disturbed are renewed.

19. Auto air vent

▸ Ensure the appliance has been fully drained.

19.1 ▸ Use a screwdriver or similar to rotate the air vent anticlockwise.

19.2 ▸ Lift the air vent (C) out of the housing and remove.

▸ To refit, follow the above in reverse.

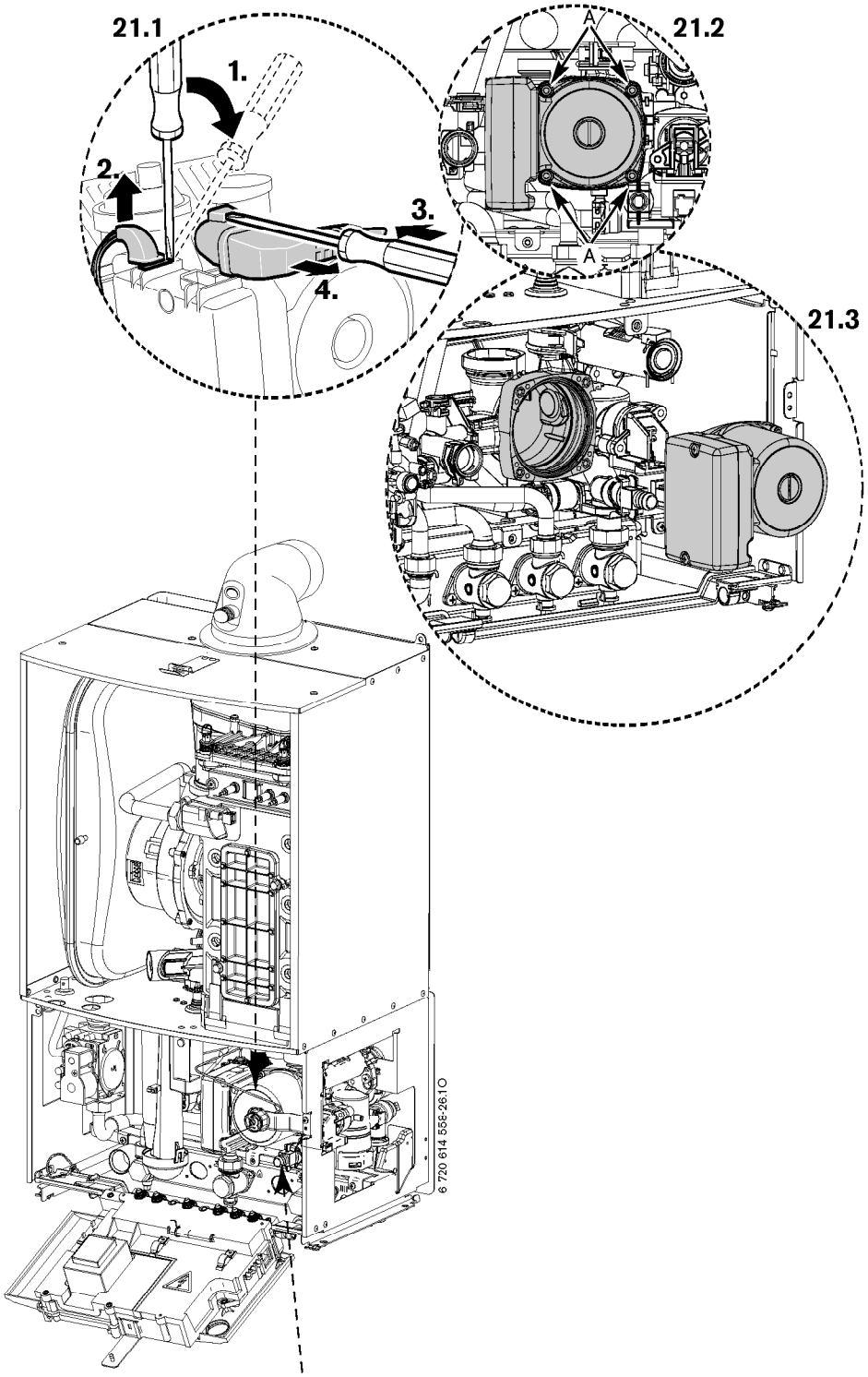

21. Pump head

▸ Ensure the appliance has been fully drained.

21.1 ▸ Disconnect the electrical connections from the pump following steps 1 to 4.

21.2 ▸ Remove the four Allen bolts (A) securing the pump at each corner.

21.3 ▸ Gently pull the pump towards you and remove.

▸ To refit, follow the above in reverse.

22. Pressure gauge

▸ Ensure the appliance has been fully drained.

▸ Withdraw the spring clip from the pressure sensing head housing.

▸ Undo the nut on the rear of the pressure gauge.

▸ Remove the pressure sensing head and pressure gauge capillary from the housing.

▸ To refit, follow the above in reverse. DO NOT omit the washer from the capillary when fitting a replacement gauge.

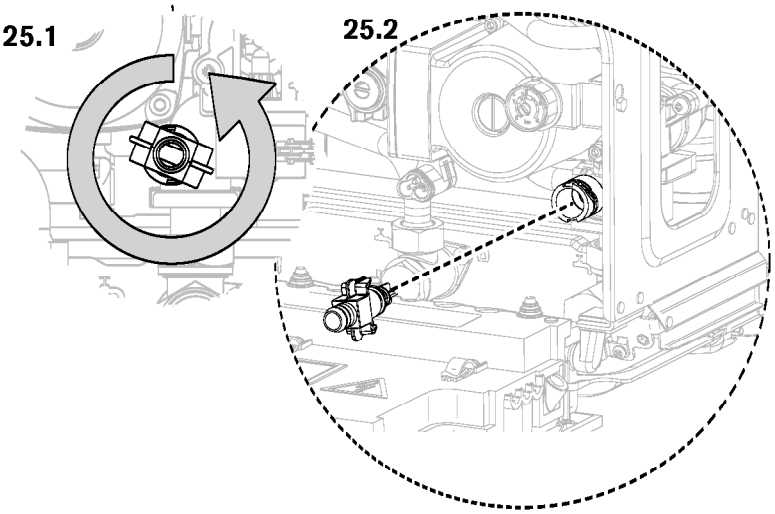

25. Drain tap

▸ Ensure the appliance has been fully drained.

25.1 ▸ Rotate the drain tap fully anticlockwise.

25.2 ▸ Withdraw the drain tap from its housing.

▸ To refit, follow the above in reverse. Ensure any seals that have been disturbed are renewed.

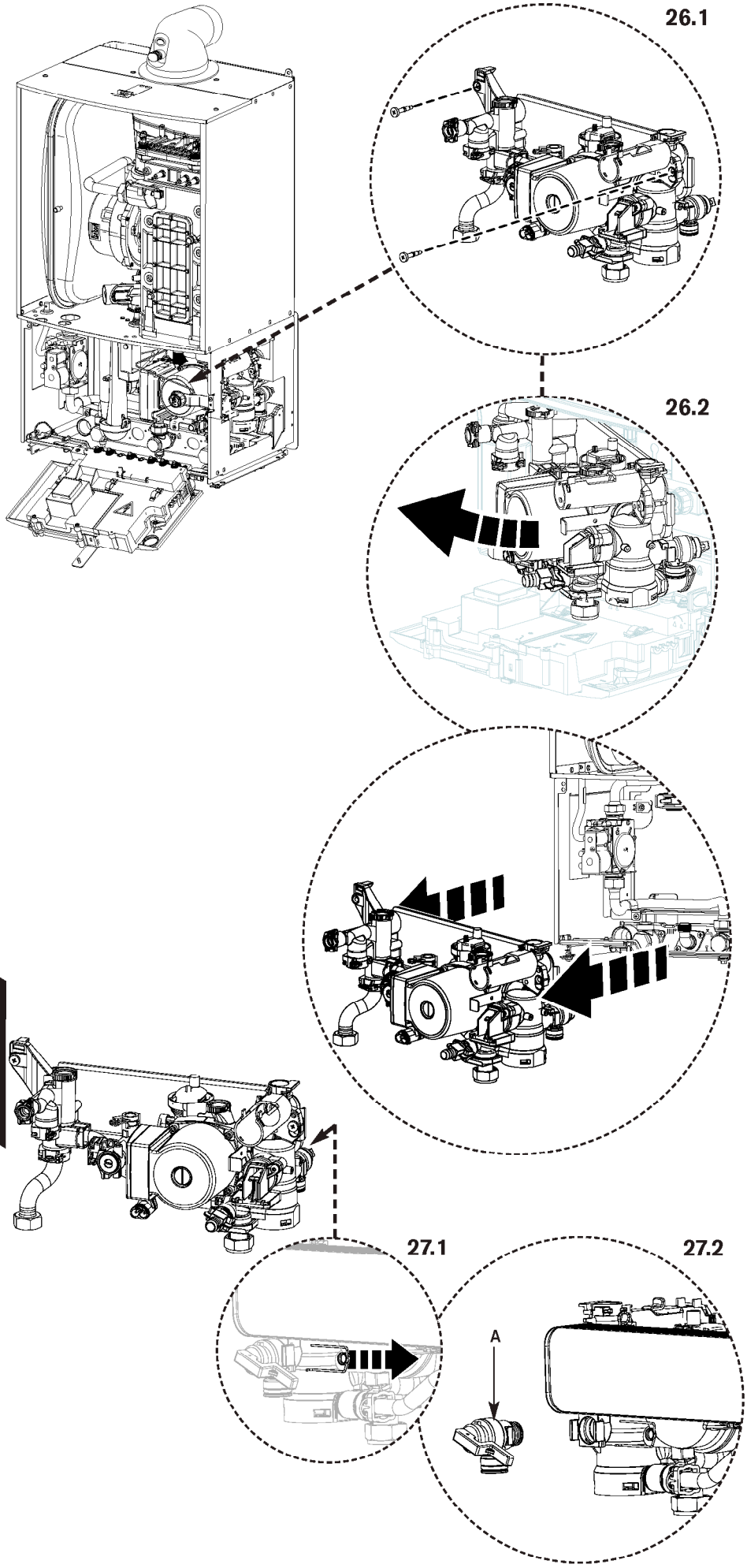

26. Hydraulic Block

▸ Ensure the appliance has been fully drained.

▸ Disconnect the electrical connections to the NTC, Turbine and pump.

▸ Undo the nuts securing the copper water pipes to the manifold (there is no need to remove the gas pipe).

▸ Release the spring clips securing these water pipes to the plastic housing and remove the pipes.

▸ Release the spring clip securing the expansion vessel pipe to the plastic housing and remove the pipe.

▸ Undo the nut securing the pressure gauge to its bracket and remove the gauge.

▸ Release the locking devices that secure the two copper water pipes leading to the combustion chamber by squeezing the two tabs together and rotating anticlockwise (viewed from above).

26.1 ▸ Undo the two screws securing the hydraulic block to the chassis (located top left/top right of the housing).

26.2 ▸ Lift the left hand side of the block slightly, then manoeuvre the block out, starting with the right hand side.

▸ Take care not to snag the harness or pressure gauge bracket.

NOTE: the block will still contain a small amount of water, which will spill if the block is tilted.

▸ To refit, follow the above in reverse. Ensure any seals that have been disturbed are renewed.

27. CH pressure relief valve

▸ Remove the Hydraulic block from the boiler (See Removing the Hydraulic Block).

27.1 ▸ Remove the spring clip from the Pressure relief valve housing.

27.2 ▸ Withdraw the pressure release valve (A) from its housing.

▸ To refit, follow the above in reverse. Ensure any seals that have been disturbed are renewed.

THE SETTING OF THE GAS RATIO MUST BE CARRIED OUT BY A COMPETENT PERSON. SETTING OF THE GAS RATIO MUST **NOT** BE ATTEMPTED UNLESS THE PERSON CARRYING OUT THE CONVERSION IS EQUIPPED WITH A COMBUSTION ANALYSER CONFORMING TO BS 7927 AND IS COMPETENT IN ITS USE.

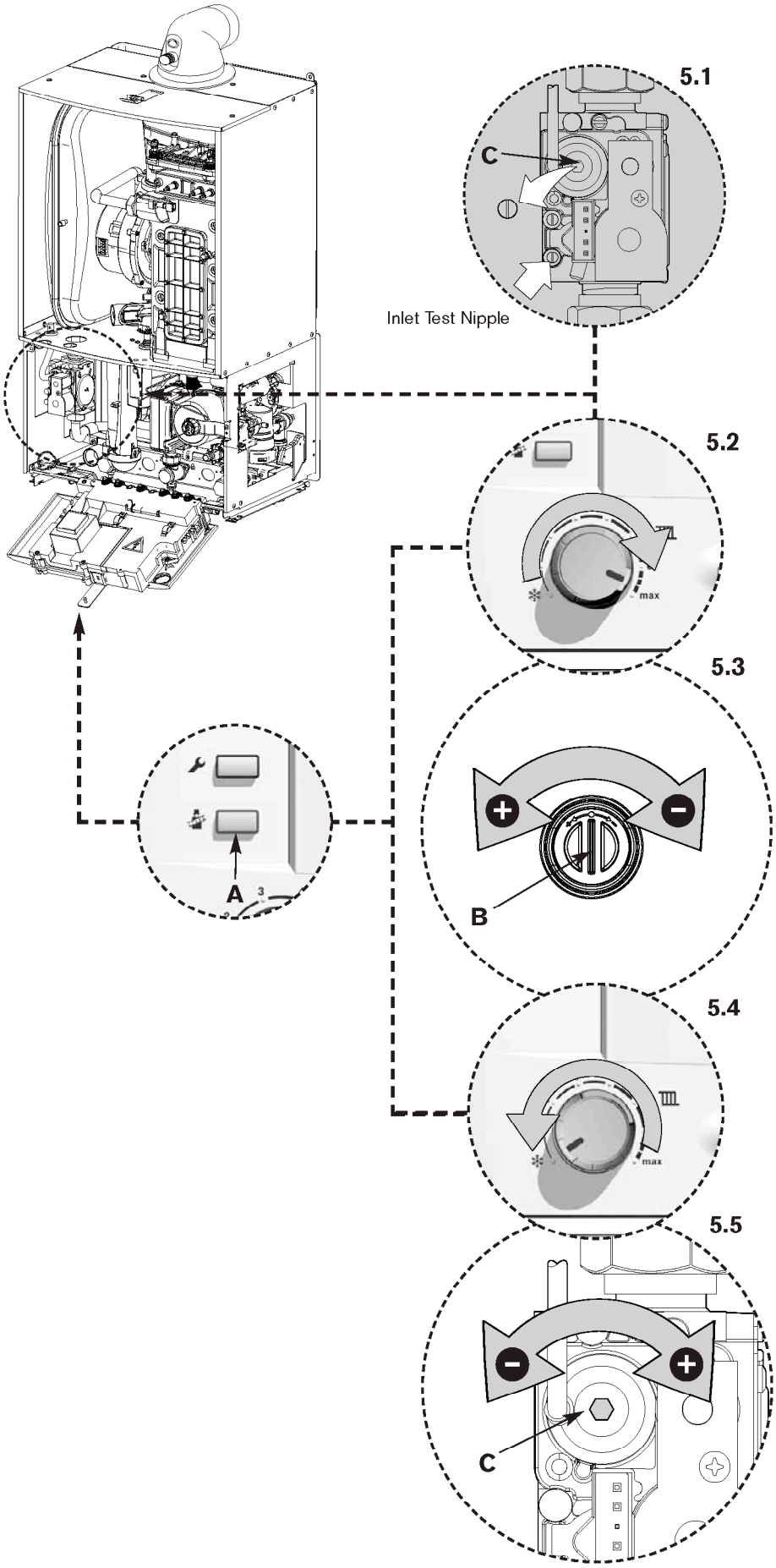

5. Setting the CO_2

NOTE: When fitted with the optional diverter valve (not supplied) and running in central heating boost mode, the boiler will operate both central heating and hot water circuits. This is to allow sufficient time for the setting procedure.

If fitted to an S or Y plan system, the system must only be run in central heating mode.

5.1 ▸ Connect manometer to inlet pressure point on the gas valve.

▸ To adjust the CO_2 it will be necessary to first operate the boiler at maximum output.

▸ Press and hold down the central heating boost button (A) for 10 seconds until illuminated.

5.2 ▸ Turn central heating control to maximum; the boiler will then go to maximum output.

Note: The control will resume normal operation after 15 minutes or if the central heating boost button is pressed for over a second.

5.3 ▸ Using a flat blade screwdriver set the CO_2 via adjuster (B) using table below.

Note: CO_2 should be measured 10 minutes after firing the appliance.

Gas type	CO_2 setting maximum	CO_2 setting minimum
Natural gas	9.6 % ±0.2	9.0 % ±0.2
LPG	11.5 % ±0.2	10.5 % ±0.2

▸ Check CO is less than 200 ppm.

▸ Measure the inlet pressure; it should be a minimum of 18 mbar for natural gas and 37 mbar for LPG.

5.4 ▸ Set the central heating control to minimum. This will make the boiler go to minimum power.

5.5 ▸ Measure the CO_2; it should now be at the figure for minimum output. If not adjust (C) on the gas valve until correct.

▸ Return to maximum and re-check the CO_2. If correct press and hold down the central heating boost button for 2 seconds; the button will cease to be illuminated and the blue power indicator will be permanently illuminated.

▸ Remove manometer and re-seal inlet pressure point on gas valve.

▸ Fit new plastic sealing cover on to outlet adjuster (B).

▸ Fit white cover over valve adjuster (C) and secure with black security tag.

▸ Remove red arrow from data plate and fit new one in correct position for gas type.

▸ Re-assemble and refit boiler case.

▸ Re-connect mains electrical supply and check boiler operation as stated in the commissioning section.

▸ Fit new label from kit over existing label on the appliance bottom panel.

1

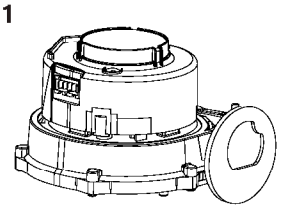

2

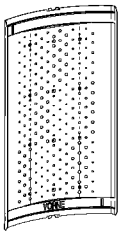

3

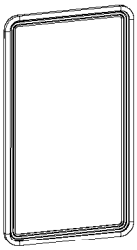

4

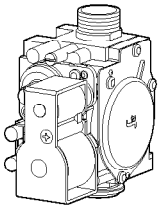

5

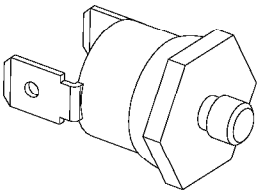

6

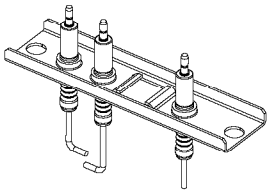

7

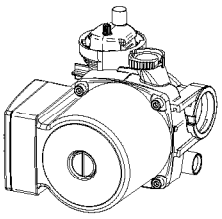

8

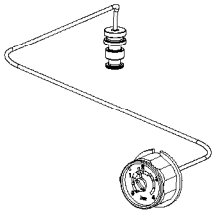

9

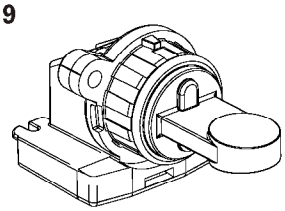

10

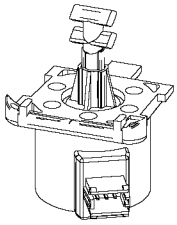

11

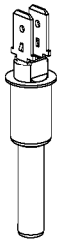

SHORT PARTS LIST

1	**Fan**	
	Part No.	**8 717 204 453 0**
	GC No.	**H26 536**
2	**Burner**	
	Part No.	**8 718 006 658 0**
	GC No.	**E27 200**
3	**Burner skin seal**	
	Part No.	**8 711 004 168 0**
	GC No.	**E27 201**
4	**Gas valve**	
	WHS Part No.	**8 718 221 347 0**
	GC No.	**TO BE CONFIRMED**
5	**Temperature limit sensor**	
	Part No.	**8 722 963 858 0**
	GC No.	**H08 291**
6	**Electrodes**	
	Part No.	**8 718 107 089 0**
	GC No.	**H22 458**
7	**Pump assembly**	
	Part No.	**8 716 106 354 0**
	GC No.	**H22 463**
8	**Pressure gauge**	
	Part No.	**8 717 208 107 0**
	GC No.	**H02 528**
9	**Diverter valve assembly**	
	Part No.	**8 716 106 845 0**
	GC No.	**H02 533**
10	**Diverter valve motor**	
	Part No.	**8 716 106 847 0**
	GC No.	**H02 534**
11	**Control sensor - primary**	
	Part No.	**8 714 500 087 0**
	GC No.	**E74 536**

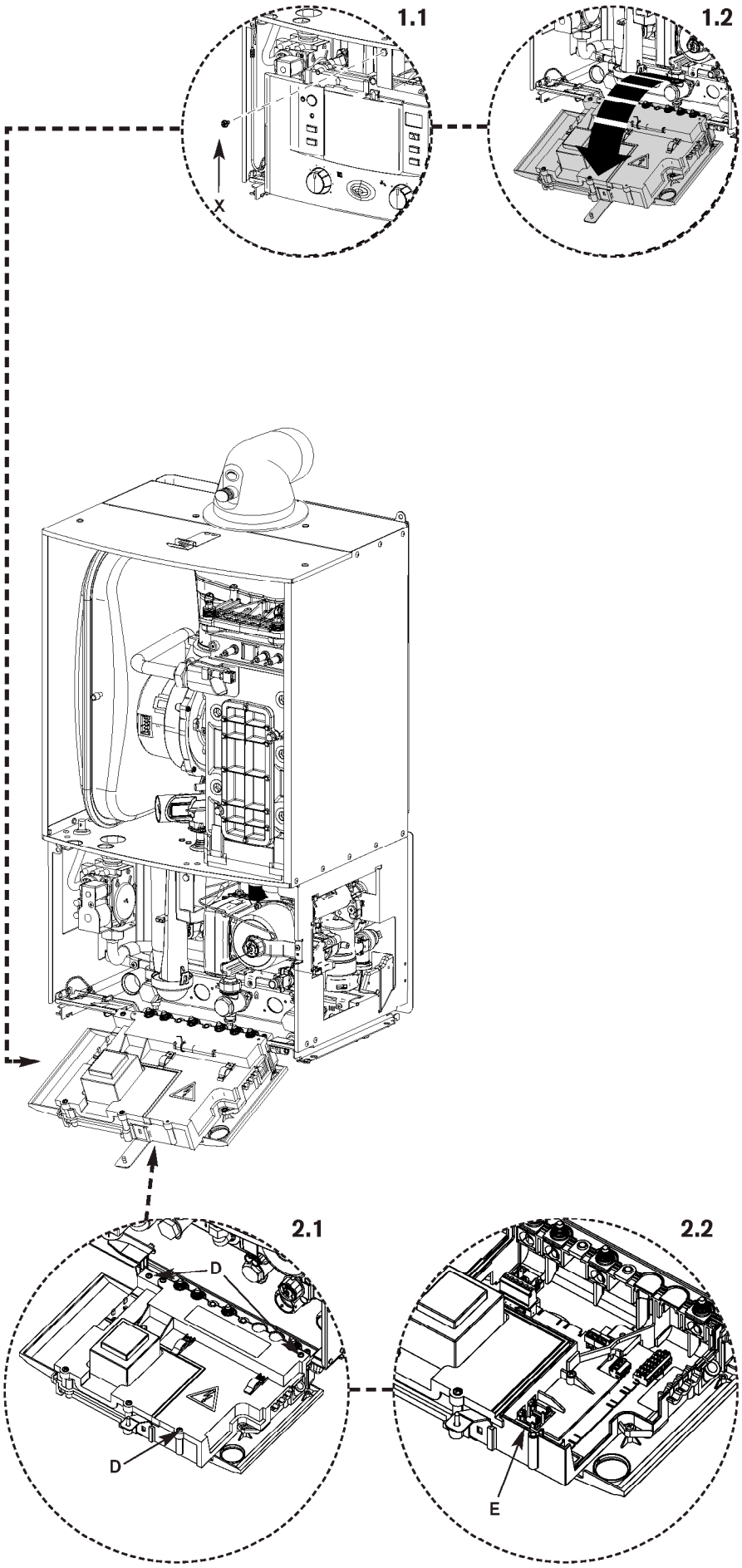

L.P.G. CONVERSION

ISOLATE MAINS ELECTRICAL SUPPLY AND REMOVE OUTER CASE AS SHOWN IN THE INSTALLATION, COMMISSIONING & SERVICING INSTRUCTIONS

THE CONVERSION MUST BE CARRIED OUT BY A COMPETENT PERSON. IT MUST **NOT** BE ATTEMPTED UNLESS THE PERSON CARRYING OUT THE CONVERSION IS EQUIPPED WITH A COMBUSTION ANALYSER CONFORMING TO BS 7927 AND IS COMPETENT IN ITS USE.

Important: The appliance shall not be installed into a room or internal space below ground level when it is intended for use with LPG (propane - G31). This does not preclude the installation into a room or space which is a basement on one side of the building but open to ground on the opposite side.

Installation Regulations
In addition to those specified in the main booklet the following standard applies when converting to an LPG appliance: **BS 5842 Domestic Propane Gas Burning Installations.**

All conversions will require the air gas ratio to be set correctly for the gas used. The procedure for setting the air gas ratio is at the rear of these instructions.

1. Moving boiler control to service position

▸ Remove boiler case, as described on page 36.

1.1 ▸ Remove screw (X) from retaining bracket.

1.2 ▸ Lower control panel into service position.

2. Code plug

2.1 ▸ Remove 3 screws (D) retaining plastic cover at rear of control box and remove.

2.2 ▸ Replace code plug (E) with new one supplied with conversion kit.

Gas type	Code plug No.	Diverter valve installed
Natural Gas	1018	No
LPG	1019	No
Natural Gas	1002	Yes
LPG	1003	Yes

▸ Replace plastic cover.

▸ Place control in normal position and secure with screw.

THE GAS / AIR RATIO MUST BE RESET AFTER CONVERSION. THE PROCEDURE CAN BE FOUND IN THE REPLACEMENT PARTS SECTION OF THIS MANUAL.

NOTE: This fault finding information is for guidance only. British Gas cannot be held responsible for costs incurred by persons not deemed to be competent.

The electronic control system for this boiler incorporates a blue central indicator. This normally confirms the permanent mains supply but, by flashing during a fault, provides a guide to the cause as listed.

This fault finding system assumes that the appliance has been operating normally until the time of failure (i.e. not a first installation error).

PRELIMINARY CHECKS: Preliminary electrical system checks are the first electrical checks to be carried out during a fault-finding procedure. On completion of the Service/Fault-Finding task which has required the breaking and remaking of electrical connections, check
(a) EARTH CONTINUITY, (b) SHORT CIRCUIT CHECK, (c) POLARITY and (d) RESISTANCE TO EARTH.

An optional text display is avaliable which gives a text description of the service functions of the boiler

Display code	Description	Remedy
A7	Hot water NTC sensor defective.	Check hot water NTC sensor and connecting lead for circuit breaks/short circuits.
A8	Break in communication to TD200 or/and RT10.	Check electrical connections.
b1	Code plug not detected.	Insert code plug correctly, test and replace if necessary.
C6	Fan speed too low.	Check fan lead and connector, and fan; replace as necessary.
E2	CH flow NTC sensor defective.	Check CH flow NTC sensor and connecting lead.
E9	Safety temp. limiter in CH flow has tripped.	Check system pressure, check safety temp. limiters, check pump operation, check fuse on pcb, bleed appliance.
EA	Flame not detected.	Is gas cock turned on? Check gas supply pressure, power supply, igniter electrode and lead, ionisation sensing electrode and lead, flue duct and CO_2 level.
F0	Internal error.	Check electrical connector contacts, programmer interface module ignition leads are not loose; replace pcb if necessary.
F7	Flame detected even though appliance switched off.	Check electrode assembly, dry pcb. Flue clear?
FA	Flame detected after gas shut off.	Check gas valve and wiring to gas valve. Clean condensation trap and check electrode assembly. Flue clear?
Fd	Reset button pressed by mistake.	Press reset button again.

More detailed fault finding procedures are described in the Service booklet for the Engineer number 6 720 612 361.

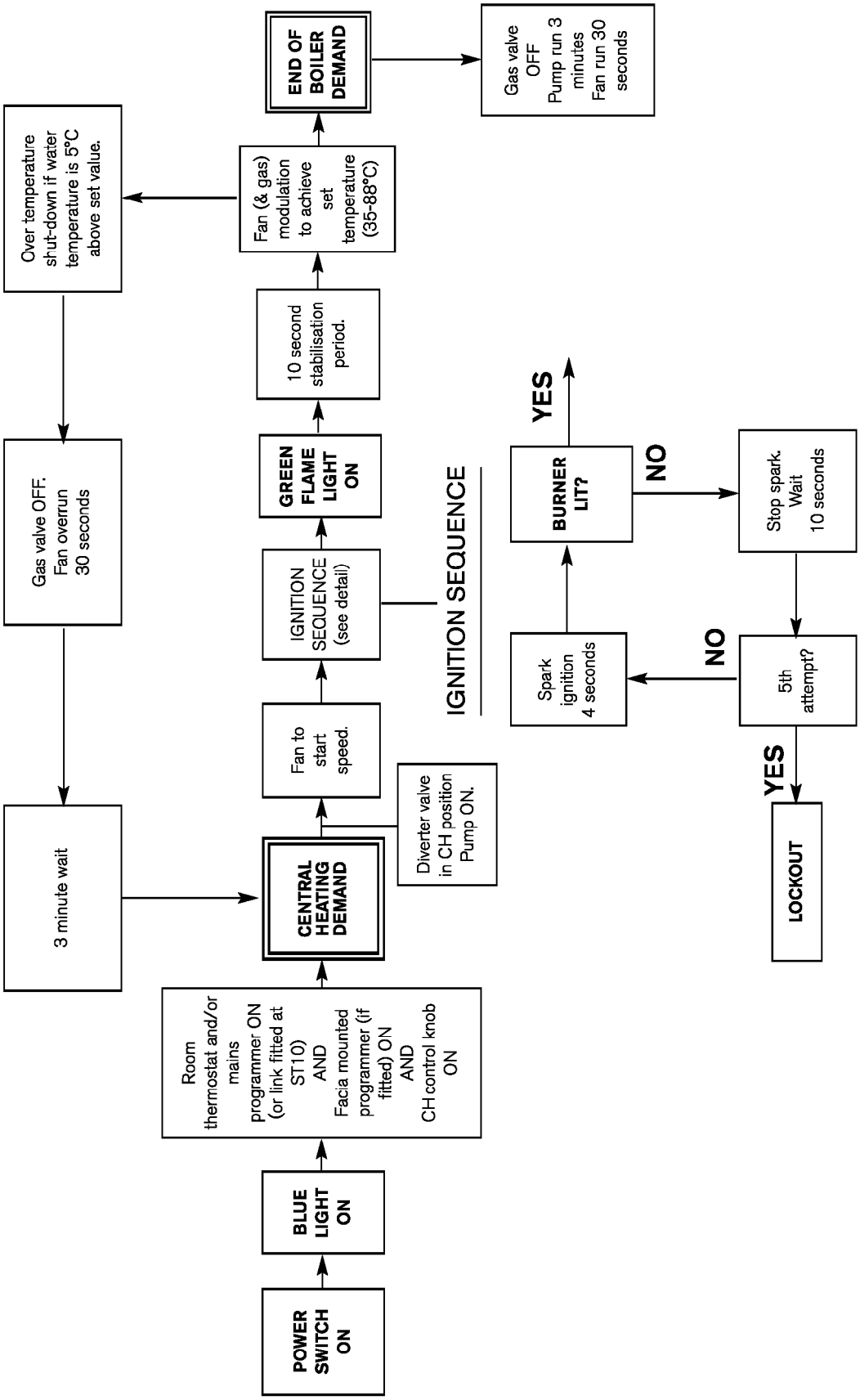
POWER SWITCH ON
BLUE LIGHT ON
Room thermostat and/or mains programmer ON (or link fitted at ST10) AND Facia mounted programmer (if fitted) ON AND CH control knob ON
CENTRAL HEATING DEMAND
Diverter valve in CH position Pump ON.
Fan to start speed.
IGNITION SEQUENCE (see detail)
IGNITION SEQUENCE
GREEN FLAME LIGHT ON
10 second stabilisation period.
Fan (& gas) modulation to achieve set temperature (35-88°C)
END OF BOILER DEMAND
Gas valve OFF Pump run 3 minutes Fan run 30 seconds
Over temperature shut-down if water temperature is 5°C above set value.
Gas valve OFF. Fan overrun 30 seconds
3 minute wait
Spark ignition 4 seconds
BURNER LIT?
YES
NO
Stop spark. Wait 10 seconds
5th attempt?
NO
YES
LOCKOUT

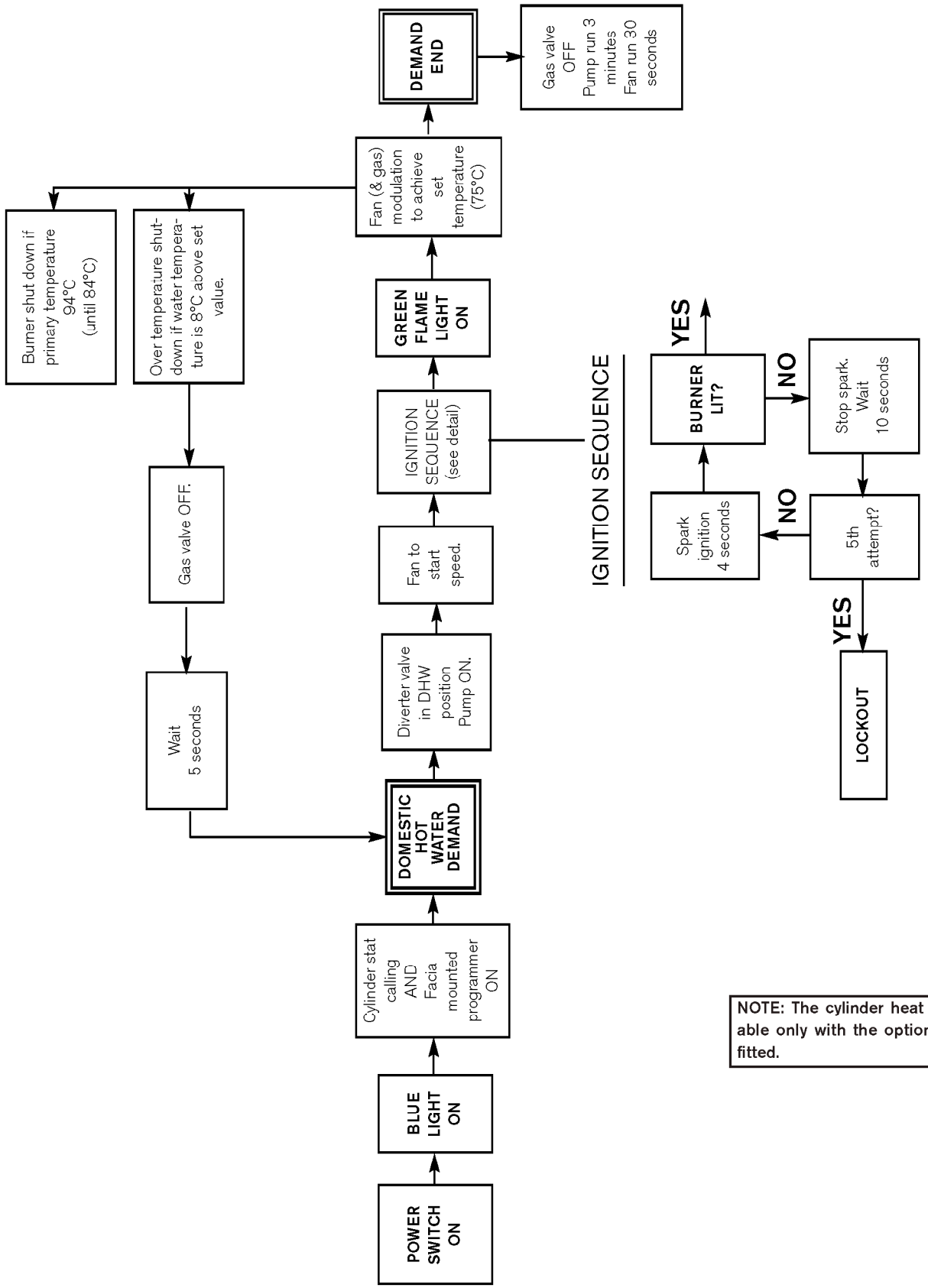

NOTE: The cylinder heat function is available only with the optional diverter valve fitted.

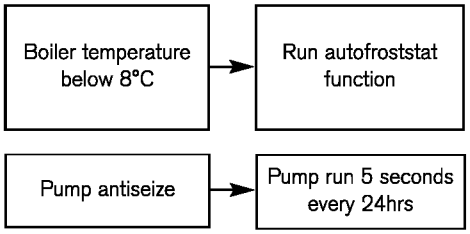

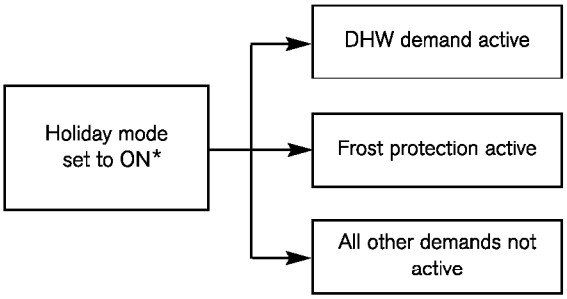

* The holiday mode is available only with the optional diverter valve fitted.

GAS BOILER SYSTEM COMMISSIONING CHECKLIST

This Commissioning Checklist is to be completed in full by the competent person who commissioned the boiler as a means of demonstrating compliance with the appropriate Building Regulations and then handed to the customer to keep for future reference.

Failure to install and commission according to the manufacturer's instructions and complete this Benchmark Commissioning Checklist will invalidate the warranty. This does not affect the customer's statutory rights.

Customer Name ______ Telephone Number ______

Address ______

Boiler Make and Model ______

Boiler Serial Number ______

Commissioned by *(print name)* ______ Gas Safe Register Number ______

Company Name ______ Telephone Number ______

Company Address ______

______ Commissioning Date ______

To be completed by the customer on receipt of a Building Regulations Compliance Certificate*:

Building Regulations Notification Number *(if applicable)* ______

CONTROLS Tick the appropriate boxes

Time and Temperature Control to Heating	Room Thermostat and Programmer/Timer ☐	Programmable Room Thermostat ☐	Load/Weather Compensation ☐	Optimum Start Control ☐
Time and Temperature Control to Hot Water			Cylinder Thermostat and Programmer/Timer ☐	Combination Boiler ☐
Heating Zone Valves			Fitted ☐	Not Required ☐
Hot Water Zone Valves			Fitted ☐	Not Required ☐
Thermostatic Radiator Valves			Fitted ☐	Not Required ☐
Automatic Bypass to System			Fitted ☐	Not Required ☐
Boiler Interlock				Provided ☐

ALL SYSTEMS

The system has been flushed and cleaned in accordance with BS7593 and boiler manufacturer's instructions Yes ☐

What system cleaner was used? ______

What inhibitor was used? ______ Quantity ☐ *litres*

CENTRAL HEATING MODE Measure and Record:

Gas Rate	☐ m^3/hr	OR		☐ ft^3/hr
Burner Operating Pressure (if applicable)	☐ mbar	OR	Gas Inlet Pressure	☐ mbar
Central Heating Flow Temperature				☐ °C
Central Heating Return Temperature				☐ °C

COMBINATION BOILERS ONLY

Is the installation in a hard water area (above 200ppm)? Yes ☐ No ☐

If yes, and if required by the manufacturer, has a water scale reducer been fitted? Yes ☐ No ☐

What type of scale reducer has been fitted? ______

DOMESTIC HOT WATER MODE Measure and Record:

Gas Rate	☐ m^3/hr	OR		☐ ft^3/hr
Burner Operating Pressure (at maximum rate)	☐ mbar	OR	Gas Inlet Pressure (at maximum rate)	☐ mbar
Cold Water Inlet Temperature				☐ °C
Hot water has been checked at all outlets			Yes ☐ Temperature	☐ °C
Water Flow Rate				☐ *l/min*

CONDENSING BOILERS ONLY

The condensate drain has been installed in accordance with the manufacturer's instructions and/or BS5546/BS6798 Yes ☐

If the condensate pipe terminates externally has the pipe diameter been increased and weatherproof insulation fitted? Yes ☐

ALL INSTALLATIONS

If required by the manufacturer, record the following CO_2 ☐ % OR CO ☐ *ppm* OR CO/CO_2 Ratio ☐

The heating and hot water system complies with the appropriate Building Regulations Yes ☐

The boiler and associated products have been installed and commissioned in accordance with the manufacturer's instructions Yes ☐

The operation of the boiler and system controls have been demonstrated to and understood by the customer Yes ☐

The manufacturer's literature, including Benchmark Checklist and Service Record, has been explained and left with the customer Yes ☐

Commissioning Engineer's Signature ______

Customer's Signature ______

(To confirm satisfactory demonstration and receipt of manufacturer's literature)

*All installations in England and Wales must be notified to Local Authority Building Control (LABC) either directly or through a Competent Persons Scheme. A Building Regulations Compliance Certificate will then be issued to the customer.

benchmark COLLECTIVE MARK
THE MARK OF QUALITY FOR THE INSTALLATION, COMMISSIONING AND SERVICING OF DOMESTIC HEATING AND HOT WATER SYSTEMS

©Heating and Hotwater Industry Council (HHIC)

Service Record

It is recommended that your heating system is serviced regularly and that the appropriate Service Interval Record is completed.

Service Provider
Before completing the appropriate Service Record below, please ensure you have carried out the service as described in the manufacturer's instructions.

Always use the manufacturer's specified spare part when replacing controls.

Service 1 Date:
Engineer Name:
Company Name:
Telephone No.
Gas Safe Register No.
Comments:
Signature:

Service 2 Date:
Engineer Name:
Company Name:
Telephone No.
Gas Safe Register No.
Comments:
Signature:

Service 3 Date:
Engineer Name:
Company Name:
Telephone No.
Gas Safe Register No.
Comments:
Signature:

Service 4 Date:
Engineer Name:
Company Name:
Telephone No.
Gas Safe Register No.
Comments:
Signature:

Service 5 Date:
Engineer Name:
Company Name:
Telephone No.
Gas Safe Register No.
Comments:
Signature:

Service 6 Date:
Engineer Name:
Company Name:
Telephone No.
Operative ID No.
Comments:
Signature:

Service 7 Date:
Engineer Name:
Company Name:
Telephone No.
Gas Safe Register No.
Comments:
Signature:

Service 8 Date:
Engineer Name:
Company Name:
Telephone No.
Gas Safe Register No.
Comments:
Signature:

Service 9 Date:
Engineer Name:
Company Name:
Telephone No.
Gas Safe Register No.
Comments:
Signature:

Service 10 Date:
Engineer Name:
Company Name:
Telephone No.
Gas Safe Register No.
Comments:
Signature:

INSTRUCTION MANUAL

INSTALLATION, COMMISSIONING & SERVICING

Manufactured exclusively for British Gas by
Worcester, Bosch Group
Cotswold Way, Warndon, Worcester WR4 9SW.
Tel. 0844 892 9900
Worcester, Bosch Group is a brand name of
Bosch Thermotechnology Ltd.
worcester-bosch.co.uk

6 720 614 560 (2013/06) OSW

British Gas

Scottish Gas