THETFORD

Cooker
Enigma 460 Series
Installation Manual

EN

Original Installation Manual

Contents

1 Introduction 2
2 Symbols 2
3 Regulations and standards 3
4 Serviceability 4
5 Before installation 4
6 Position and placement 4
7 Connecting gas 7
8 Connecting electricity 7
9 After installation 8
10 Technical specifications 8
11 Servicing 9
12 Questions / customer service 10

1. Introduction

This is the installation manual for the Thetford SOH460 series cooker. The manual is meant for qualified installers who will install the cooker in a caravan, camper, boat or holiday home. Read the information and instructions carefully and follow them strictly to install the cooker safely and correctly.

Also read the warnings in the user manual before testing the cooker after installation.

Our policy is one of continuous development and improvement. Specifications and illustrations may change subsequent to publication.

If the appliance is not installed in accordance with national and European regulations, rules and standards this will void the warranty and may lead to criminal prosecution.

2. Symbols

Key to symbols:

Warning. Risk of injury and/or damage.

Attention. Important information.

Note. Additional information.

3. Regulations and standards

Do not modify this appliance, unless the modification is authorised and carried out by the manufacturer or their agent.

Use only genuine and approved parts and materials.

Wear the correct Personal Protective Equipment during the installation. Also follow the applicable safety regulations.

Gas and electrical appliances should only be installed by qualified and certified professionals.

Ensure that the type of gas and pressure match the specification of the appliance. You can find the specification on the data badge.

Pay close attention to current regulations on ventilation in the country of use. The installation must provide for adequate air supply for combustion to the burners, safe removal of combustion products and avoidance of accumulation of unburned gases.

If it is not possible to install the appliance in accordance with these instructions, please refer to Thetford for further guidance.

For more information about ventilation regulations and requirements, see Position and placement.

4. Serviceability

The installer of Thetford products is responsible for proper installation to ensure the correct functionality and serviceability of the appliance. In terms of serviceability, this means that a dealer or an authorised Thetford service partner must be able to de-install and re-install the Thetford products within the time that is allowed according to the Thetford time-list, using standard tools and equipment.

This is to claim any warranty during the period of 3 years after purchase date. In case of any queries on this subject, please contact the Thetford local service representative before installing the product.

5. Before installation

Check the contents of the box:

- S0H460 series cooker
- Grill pan
- Oven shelf
- User manual
- Installation manual

If something is missing from the box, please contact your dealer.

6. Position and placement

- Remove all packaging materials from the appliance.
- Check the opening where the appliance will be installed. The location must provide:
  - Wood cabinetry
  - Support for weight of at least 50kg (for the cooker and items placed inside)
  - Grounded electrical outlet
  - Minimum installation clearances for installation location (see images below)
- Mount the wood battens to both sides of the cabinet.
- Slide the appliance all the way into the opening.

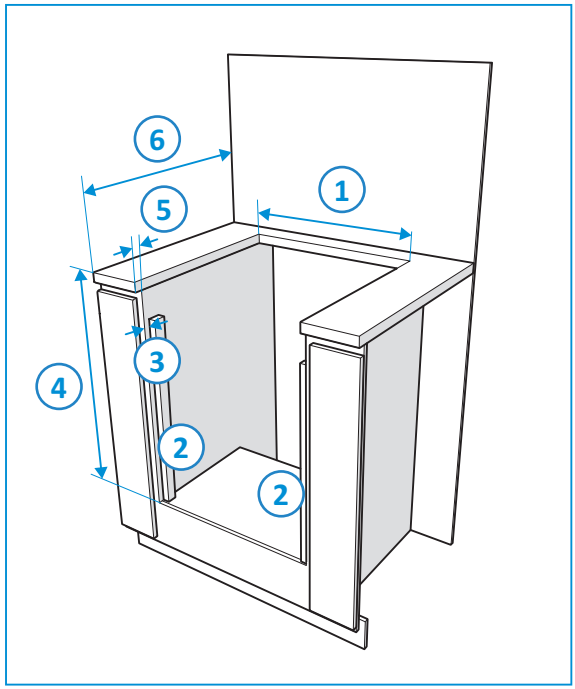

1. 602-604mm
2. Wood batten, max. 25x50x585mm, to be fitted to both sides of the cabinet
3. 15mm
4. 750mm
5. 32mm
6. 600mm

EN

The appliance must be positioned free from draughts, which may effect the combustion. It must also be positioned in a manner that will prevent the accumulation of unburnt gas.

This appliance may be installed in a kitchen/kitchen diner but not in a room containing a bath or a shower. LPG appliances must not be fitted below ground level e.g. in a basement.

Follow the minimum dimensions shown in this manual. Any deviation could result in excessive temperature rise. If the minimum dimensions must be reduced, due to design constraints, a temperature rise test of all furniture fitted around the appliance must be performed. Where the minimum dimensions are reduced, it is recommended to install non-combustible material.

The surrounding surfaces must be able to withstand the allowable temperature rise of 65°C above ambient temperature, as specified in the EN30-1-1 standard and in accordance with the design of this unit.

All combustible materials such as curtains and shelves must be kept well clear of the appliance.

The temperature of the surrounding surfaces may rise if there are other additional devices besides the appliance. Check the allowable temperature of the materials used for the surrounding surfaces to ensure that they meet the requirements of EN30-1-1, EN1949, EN1645-1, EN1646-1, EN1647 and EN721.

- Fix the appliance in place using the fixing screw positions located on either side of the front trim and each hob side trim. Make sure the appliance is located correctly in the aperture prior to final fixing.

- Maintain the minimum distances between the cooking appliance and side, rear and overhanging parts.

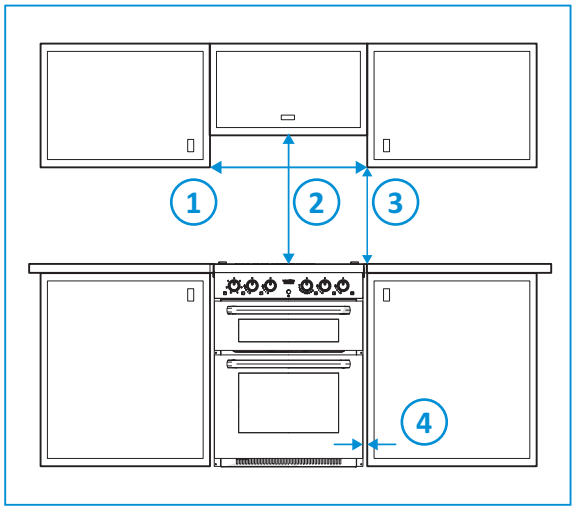

1. min. 600mm
2. min. 500mm
3. min. 400mm
4. min. 10mm

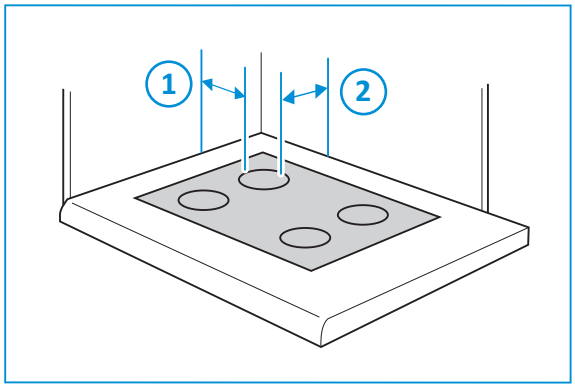

1. min. 200mm
2. min. 200mm

If you are unable to maintain these minimum distances, install fire-resistant material for protection.

For models with a glass lid, the distance from the edge of the burner to the rear wall can be reduced to 110mm.

- Provide venting to the cabinet with minimum size 2000mm^2 (A).

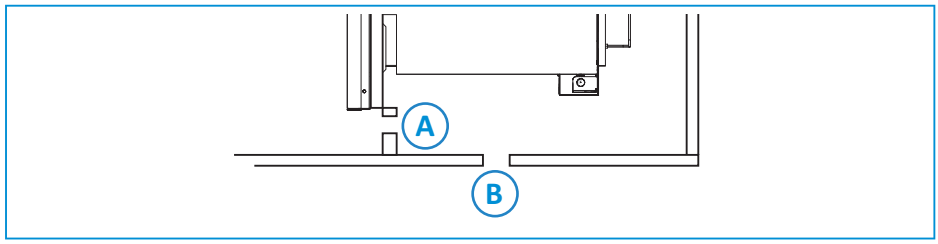

To ensure correct operation the installation must allow for free exchange of air between the enclosure and the living environment.

Design constraints may dictate additional venting at the front of the installation.

Maintain provision for the dispersal of unburnt gas beneath the appliance. Ensure any gas dispersal hole (B), is located away from the oven burner.

To ensure correct operation and prevent changes in air pressure affecting appliance performance, the appliance must be built into a securely fixed self-contained cabinet which is not connected to externally vented chambers in adjacent furniture, other than the gas dispersal hole described above.

EN

7. Connecting gas

- Connect the gas to the Ø8mm gas inlet.
- Use only metal gas pipes in accordance with the requirements of EN1949.

Never use rubber tubing.

For Enigma SOH460 series:

The burners have a fixed air/fuel mixture. When using propane, the flames burn quietly with a blue-green colour and no yellow at the tip. With butane, the flames have yellow tips. The yellow colour of the flames increases slightly as the burner heats up.

For Enigma SOH460NG series:

The burners have fixed aeration and no adjustment is required. Using natural gas, the flames should burn quietly with a blue/green colour with no sign of yellow tips.

8. Connecting electricity

- Connect the plug to a suitable 230 - 240V electric supply.
- Models fitted with power cord only: This appliance is supplied with a double insulated cord, type 227 IEC 53, H05VV-F, which is suitable for use up to 5A. This should be connected to a double pole switched mains supply, with 3mm minimum contact separation at all poles in accordance with the wiring rules. The switch must be accessible after installation.
- Models fitted with Euro plug and power cord: This appliance is supplied with a Euro plug attached to the end of the power cord, for connection to a switched wall mounted socket. The switched socket must be accessible after installation.

This appliance must be earthed.

Ensure that all electrical cables are routed directly away and well clear of this appliance and other heat sources.

Do not allow the cord or wires to hang loose into the lower compartment.

9. After installation

- Ensure that all packaging materials have been removed.
- Fix a warning label next to the unit that meets the requirements of EN721, Annex A.
- Fix a warning notice next to the gas dispersal hole for LPG appliances, with the text: Warning! Under no circumstances should the gas dispersal hole be obstructed.
- Test all gas piping and connections and make sure they do not leak.
- Check the pressure of the gas when all connected gas appliances are in use simultaneously. The gas pressure may not rise or fall by more than 2.5mbar relative to the nominal value.

10. Technical specifications

Table 1: Burner specifications

	SOH460 series					
	Sabaf burners & taps			Somipress burners & Copreci taps		
	Gas input		Injector	Gas input		Injector
	kW	g/hr	mm	kW	g/hr	mm
Gas burners	3 x 1.5 1 x 1.0	3 x 108 1 x 72	0.62 0.50	3 x 1.5 1 x 1.0	3 x 108 1 x 72	0.61 0.52
Oven burner	1.8	130	0.65	1.8	130	0.65
Grill burner	1.6	115	0.62	1.6	115	0.62
Total	8.9	641		8.9	641	

	SOH460NG series	
	Sabaf burners & taps	
	Gas input	Injector
	kW	mm
Gas burners	3 x 1.8 1 x 1.0	0.97 0.72
Oven burner	1.8	0.97
Grill burner	1.8	1.0
Total	10	

EN

Table 2: Dimensions and weight

	SOH460 series		
Dimensions	H	W	D
mm	752	615	600
Appliance weight	35kg		
Oven volume	53L		
Spark ignition	240V		

Table 3: Gas category

SOH460 series		SOH460NG series
Class 3 Appliance		Class 3 Appliance
CAT $I_{3+(28\text{-}30/37)}$	CAT $I_{3B/P(30)}$	CAT $I_{2H(20)}$
BUTANE (G30) 28 – 30mbar	BUTANE (G30) 30mbar	Natural Gas (G20) 20mbar
PROPANE (G31) 37mbar	PROPANE (G31) 30mbar	

Use only the type of gas and the pressures specified.

11. Servicing

All servicing must be carried out by an approved competent person. Before any service work is started, the appliance should have been left to cool and be disconnected from both the gas and electrical supplies. After each service the appliance must be checked for gas soundness and electrical safety.

For service, please contact your authorised local Service Centre giving details of the model and serial number on the data badge plus date of purchase.

Model Name & Series Number			
G30 G31	CAT I_3+(28-30/37) BUTANE 28-30mbar PROPANE 37mbar	CAT I_3B/P(30) BUTANE 30mbar PROPANE 37mbar	THETFORD
∑Qn	Power kW (g/hr)	Model Number	Spark Ignition
CE	Pin Number	Serial Number	Voltage ~ 50 Hz Power kW
	Country Codes 1	Country Codes 2	QC Pass / Order No

12. Questions / customer service

- Visit www.thetford.com.
- Contact Customer Service Thetford in your country. See the addresses on the back.

SINS2328/0117-V01

EUROPEAN HEADQUARTERS
Thetford B.V.
Nijverheidsweg 29
P.O. Box 169
4870 AD Etten-Leur
The Netherlands

T +31 76 504 22 00
F +31 76 504 23 00
E info@thetford.eu

UNITED KINGDOM
Thetford Ltd.
Unit 6
Brookfields Way
Manvers, Rotherham
S63 5DL, England
United Kingdom

T +44 844 997 1960
F +44 844 997 1961
E infogb@thetford.eu

GERMANY
Thetford GmbH
Schallbruch 14
D-42781 Haan
Deutschland

T +49 2129 94250
F +49 2129 942525
E infod@thetford.eu

FRANCE
Thetford S.A.R.L.
Parc BUROPLUS / Bâtiment 6
18, Boulevard de la Paix
95800 CERGY
France

T +33 1 30 37 58 23
F +33 1 30 37 97 67
E infof@thetford.eu

ITALY
Thetford Italy c/o Tecma s.r.l.
Via Flaminia
Loc. Castel delle Formiche
05030 Otricoli (TR)
Italia

T +39 0744 709071
F +39 0744 719833
E infoi@thetford.eu

SPAIN AND PORTUGAL
Mercè Grau Solà
Agente para España y Portugal
c/ Castellet, 36 bxs 2ª
08800 Vilanova i la Geltrú
Barcelona
España

T +34 938 154 389
F not available
E infosp@thetford.eu

SCANDINAVIA
Thetford B.V.
Representative Office Scandinavia
Hantverkaregatan 32D
521 61 Stenstorp
Sverige

T +46 31 336 35 80
F +46 31 44 85 70
E infos@thetford.eu

AUSTRALIA
Thetford Australia Pty. Ltd.
41 Lara Way
Campbellfield VIC 3061
Australia

T +61 3 9358 0700
F +61 3 9357 7060
E infoau@thetford.eu
www.thetford.com.au

CHINA
Thetford China
Rm. 1207, Coastal Building
(East Block)
Haide 3rd Road, Nanshan District
Shenzen, 518054
China

T +86 755 8627 1393
F +86 755 8627 1673
E info@thetford.cn
www.thetford.cn

©Thetford 2017

www.thetford.com